XREF: 3401365201_LOGFILE - Phase 1 Yellin [P:\340_FoodBev\3401365 Frito Lay Project Knight\Design-Working\Common\Titleblocks\3401365201_LOGFILE - Phase 1 Yellin.dwg]
XREF: 3401365201CM-92 [..\..\05 Model Files\Phase 1 Yellen Lot\3401365201CM-92.dwg]
XREF: 3401365201CM-01-YELLEN [..\..\05 Model Files\Phase 1 Yellen Lot\3401365201CM-01-YELLEN.dwg]
XREF: 3401365201CM-21 [..\..\05 Model Files\Phase 1 Yellen Lot\3401365201CM-21.dwg]

P:\340_FoodBev\3401365 Frito Lay Project Knight\Design-Working\CIVIL\AutoCAD\06 Sheet Files\PHASE 1 YELLIN LOT\3401365201_1C-001.dwg Layout Name: 1C-001 Mar 12, 2021 - 10:43am PLOTTED BY: MSLyons

SITE PLAN REVIEW PLANS FOR:

YELLIN TRAILER PARKING LOT

DAYVILLE, WINDHAM COUNTY, CONNECTICUT

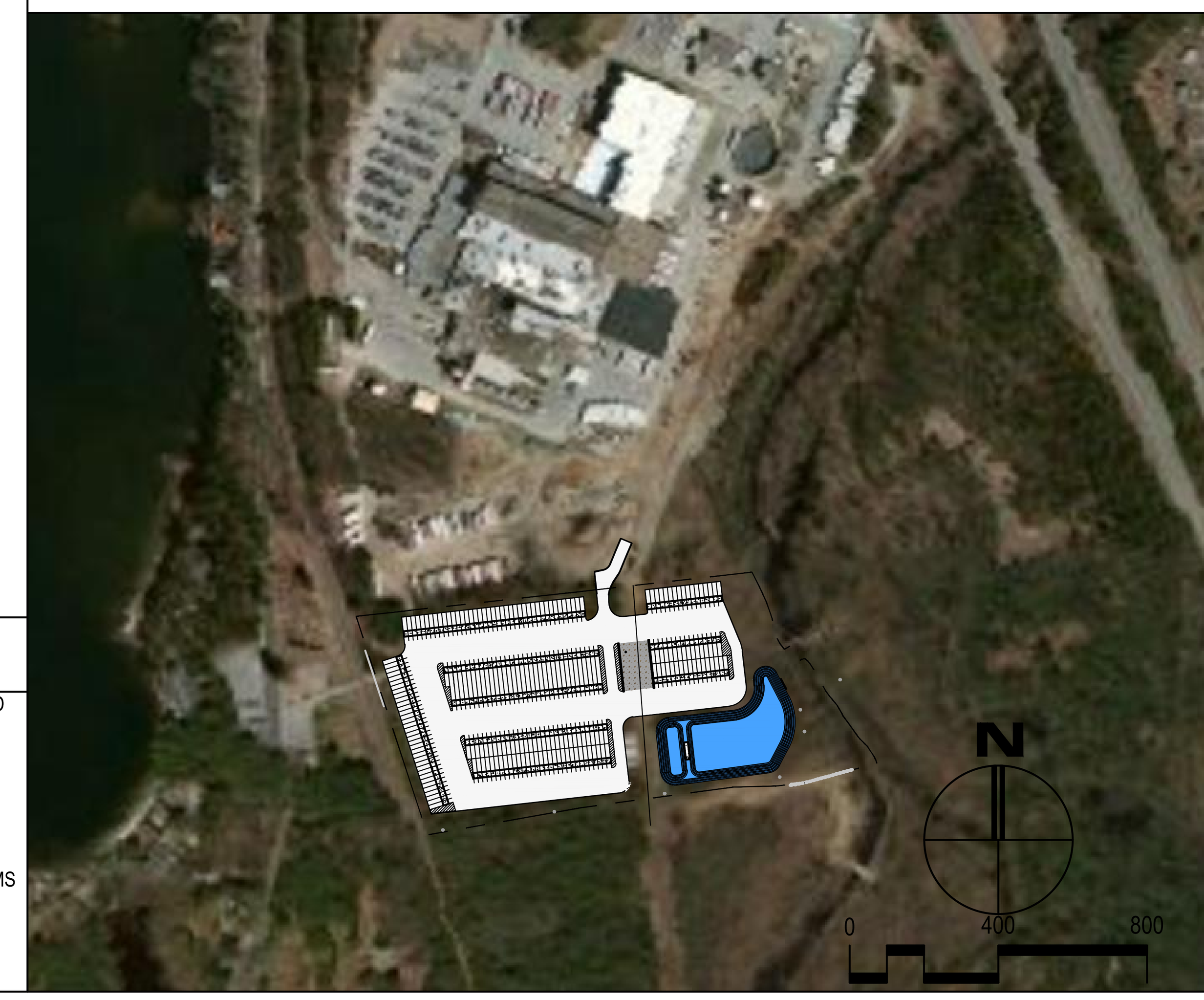

REVISED SITE PLAN REVIEW - TOWN OF KILLINGLY

03/12/2021

GENERAL CIVIL ENGINEERING LEGEND

EXISTING	PROPOSED	DESCRIPTION
		PROPERTY LINE
		RIGHT-OF-WAY LINE
		CENTERLINE
		SECTION,TOWNSHIP,RANGE LINE
		FENCE
		RETAINING WALL
		BUILDING
		EXISTING TREE LINE
		FEMA FLOODPLAIN BOUNDARY
LOD	LOD	LIMITS OF DISTURBANCE
	SF	SILT FENCE
	SSF	SUPER SILT FENCE
		PAVEMENT LINE , SIDEWALK LINE
		CURB, CURB AND GUTTER
25.50±EX	25.50	SPOT ELEVATIONS
25	25	CONTOURS
		SANITARY SEWER
		STORM SEWER
W	W	DOMESTIC WATER
F	F	FIRE MAIN
UG	UG	GAS MAIN
FM	FM	SANITARY SEWER FORCE MAIN
E	E	UNDERGROUND ELECTRIC
OH	OH	OVERHEAD ELECTRIC
UT	UT	UNDERGROUND TELEPHONE
OT	OT	OVERHEAD TELEPHONE
UD	UD	UNDERDRAIN
		FIRE HYDRANT
		DOUBLE CHECK VALVE ASSEMBLY
R.P.	R.P.	RED.PRESSURE BACKFLOW PREVENTER
PIV F	PIV F	POST INDICATOR VALVE
WV		VALVE
		SECTIONAL CONTROL VALVE
		SPRINKLER RISER
M		WATER METER
		PHONE/POWER POLE
		INLET/CATCH BASIN
		FLARED END
		MITERED END
		FLUME
		ENDWALLS
	P.P.	UTILITY POLE
		SINGLE LIGHT STANDARD (LIGHT POLE)
		DOUBLE LIGHT STANDARD (LIGHT POLE)
		POLE MOUNTED SECURITY CAMERA
T	T	TRANSFORMER
		VAULTS
		STORM SEWER MANHOLE
		SANITARY SEWER MANHOLE
S		CLEAN OUT
E		ELECTRICAL MANHOLE
ST-1	ST-1	DRAINAGE STRUCTURE LABEL
S-1	S-1	SANITARY SEWER STRUCTURE LABEL
B B-12		SOIL BORING
		DETAIL REFERENCE

APPLICABLE CODES

TOWN OF KILLINGLY ORDINANCE NUMBER: XXXX.XX

2004 CONNECTICUT STORMWATER QUALITY MANUAL

CONNECTICUT DEPARTMENT OF ENERGY AND ENVIRONMENTAL PROTECTION

2010 AMERICANS WITH DISABILITIES ACT (ADA) STANDARDS FOR ACCESSIBLE DESIGN
“CHAPTER 4: RAMPS AND CURB RAMPS”
“CHAPTER 5: PARKING SPACES”

NATIONAL FIRE PROTECTION AGENCY: NFPA 24 "STANDARD FOR INSTALLATION OF PRIVATE SERVICE MAINS "
“CHAPTER 10 UNDERGROUND PIPING”

TEN STATES STANDARDS FOR WASTEWATER FACILITIES, 2004 EDITION

AMERICAN CONCRETE INSTITUTE (ACI) 330R-08 “GUIDE FOR DESIGN AND CONSTRUCTION OF CONCRETE PARKING LOTS"

STATE OF CONNECTICUT DEPARTMENT OF TRANSPORTATION STANDARDS AND SPECIFICATIONS

GLOSSARY

REMOVE:	DEMOLISH AND HAUL OFF-SITE TO APPROVED SOLID WASTE FACILITY
INSTALL:	PROVIDE ALL MISCELLANEOUS MATERIALS & SERVICES (LABOR & MATERIAL)
PROVIDE:	FURNISH & INSTALL
REMARKS:	INFORMATION PERTAINING TO ALL ITEMS ON A SCHEDULE
NOTES:	INFORMATION PERTAINING ONLY TO INDICATED ITEMS ON A PLAN
SALVAGE:	REMOVE AND RETURN TO OWNER FOR REUSE

DESIGN CRITERIA

SIZE AREA:	15.20 AC
DISTRIBUTED AREA:	12.90 AC
LATITUDE:	41°51'44.04"N
LONGITUDE:	71°53'27.53"W
FINISHED FLOOR ELEVATION:	F.F.E.=283.00'
FLOOD PLAIN:	"ZONE X"
FIRM MAP NUMBER:	090136 0004 B EFFECTIVE DATE 01/03/1985
ZONING:	XX-XXA
PROJECT USE:	INDUSTRIAL
HYDRAULIC SOIL GROUP:	A, B, AND B / D
DOWNSTREAM WATER BODY:	FIVE MILE CREEK

DESIGN STORM:
- CONVEYANCE: 10 YR 10 MINUTE
- FLOOD MITIGATION: 100 YR
- ROUTING:
  - 1 YR / 24 HR; 2.6 IN.
  - 2 YR / 24 HR; 3.2 IN.
  - 10 YR / 24 HR; 4.8 IN.
  - 25 YR / 24 HR; 5.5 IN.
  - 100 YR / HR; 6.9 IN.

INTENSITY:
- I0 YR / 10 MIN. = 4.97 IN/HR
- TC = 10 MIN.

STORM WATER MANAGEMENT CRITERIA:

- 2004 CONNECTICUT STORMWATER QUALITY MANUAL
- TOWN OF KILLINGLY

VICINITY MAP

SHEET INDEX

CIVIL SHEET INDEX

Sheet Number	Sheet Title
1C-001	COVER SHEET
1C-100	EXISTING CONDITIONS
1C-111	DEMOLITION PLAN
1C-120	GEOMETRY PLANS
1C-140	GRADING AND DRAINAGE PLAN
1C-141	STORM SEWER PIPE AND STRUCTURE TABLES
1C-161	INITIAL EROSION AND SEDIMENT CONTROL PLAN
1C-162	FINAL EROSION AND SEDIMENT CONTROL PLAN
1C-170	PRE DEVELOPMENT DRAINAGE MAP
1C-171	POST DEVELOPMENT DRAINAGE MAP
1C-172	BMP DRAINAGE AREA MAP
1C-173	TEST PIT & BORING LOCATIONS
1C-241	GRADING AND DRAINAGE PROFILES
1C-242	GRADING AND DRAINAGE PROFILES
1C-243	GRADING AND DRAINAGE PROFILES
1C-440	ENLARGED GRADING AND DRAINAGE PLAN
1C-520	GEOMETRY DETAILS
1C-540	GRADING AND DRAINAGE DETAILS
1C-541	GRADING AND DRAINAGE DETAILS
1C-560	EROSION AND SEDIMENT CONTROL DETAILS

CALLOUTS

KEY NOTE — BENCHMARK — REFERENCE NUMBER / SHEET NUMBER ENLARGED PLAN OR DETAIL — SECTION / DRAWING — FLOW ARROW

ABBREVIATIONS

AD	AREA DRAIN	FC	FACE OF CURB	PSF	POUNDS PER SQUARE FOOT
ALT	ALTERNATE	FF	FINISHED FLOOR	PSI	POUNDS PER SQUARE INCH
APPROX	APPROXIMATE	FFE	FINISHED FLOOR ELEVATION	PVC	POLYVINYL CHLORIDE
ARCH	ARCHITECTURAL	FH	FIRE HYDRANT	R	RADIUS, RISER
ATFP	ANTI-TERRORISM FORCE PROTECTION	FL	FLOWLINE	RCP	REINFORCED CONCRETE PIPE
AVG	AVERAGE	FT	FOOT. FEET	RD	ROOF DRAIN
BLDG	BUILDING	FTG	FOOTING	REF	REFERENCE
BW	BOTTOM OF WALL	FUT	FUTURE	REINF	REINFORCED, REINFORCING
BTW	BETWEEN	G	GAS	REQ'D	REQUIRED
CB	CATCH BASIN	GAL	GALLON	REV	REVISION
CF	CUBIC FEET	GPM	GALLONS PER MINUTE	ROW	RIGHT OF WAY
CJ	CONTROL JOINT	HC	HANDICAPPED	S	SOUTH
CL	CENTER LINE	HORIZ	HORIZONTAL	SE	SOUTHEAST
CLR	CLEAR	HP	HIGH POINT, HORSEPOWER	SECT	SECTION
CO	CLEANOUT	HT	HEIGHT	SF	SQUARE FEET
COL	COLUMN	HVAC	HEATING VENTILATING AIR CONDITIONING	SHT	SHEET
CONC	CONCRETE	HW	HOT WATER	SPECS	SPECIFICATIONS
CONN	CONNECTION/ CONNECT	IN	INCH	SS	SANITARY SEWER
CONST	CONSTRUCTION	INV	INVERT	STD	STANDARD
CONT	CONTINUOUS	JT	JOINT	STRUCT	STRUCTURAL
CTR	CENTER	L	LONG, LENGTH	SQ	SQUARE
CY	CUBIC YARD	LBS	POUNDS	SW	SOUTHWEST
DBL	DOUBLE	LP	LOW POINT	T	TRANSFORMER
DEG	DEGREES	LT	LIGHT	T&B	TOP & BOTTOM
DET	DETAILS	MAX	MAXIMUM	TC	TOP OF CURB
DIA	DIAMETER	MFR	MANUFACTURING	TELE	TELEPHONE
DIAG	DIAGONAL	MH	MANHOLE	TEMP	TEMPORARY
DIM	DIMENSION	MIN	MINIMUM	TOC	TOP OF CONCRETE
DS	DOWNSPOUT	MISC	MISCELLANEOUS	TW	TOP OF WALL
DWG(S)	DRAWING(S)	N	NORTH	TYP	TYPICAL
E	EAST	NE	NORTHEAST	UTIL	UTILITY
EA	EACH	NIC	NOT IN CONTRACT	VERT	VERTICAL
EJ	EXPANSION JOINT	NO	NUMBER	W	WIDTH, WEST
ELEC	ELECTRICAL	NPS	NOMINAL PIPE SIZE	W/	WITH
EL	ELEVATION	NTS	NOT TO SCALE	WT	WEIGHT
EQUIP	EQUIPMENT	NW	NORTHWEST	WWM	WELDED WIRE MESH
EQ	EQUAL	OC	ON CENTER		
EW	EACH WAY	OD	OUTSIDE DIAMETER		
EXIST, EX	EXISTING	OFCI	OWNER FURNISHED CONTRACTOR INSTALLED		
		OFOI	OWNER FURNISHED OWNER INSTALLED		
		OH	OVERHEAD		
		OPP	OPPOSITE		
		PL	PROPERTY LINE		
		PLMB	PLUMBING		

GENERAL NOTES

1. PRIOR TO THE START OF CONSTRUCTION THE CONTRACTOR SHALL INSTALL (AND MAINTAIN DURING CONSTRUCTION) ALL SEDIMENT CONTROL MEASURES AS NECESSARY TO RETAIN SEDIMENTS ON THE SITE.
2. CONTRACTOR SHALL MAINTAIN RED-LINE DRAWINGS DURING CONSTRUCTION WHICH SHOW "AS-BUILT" CONDITIONS OF ALL WORK INCLUDING PIPING, DRAINAGE STRUCTURES, TOPO OF POND(S), OUTLET STRUCTURES, DIMENSIONS, ELEVATIONS, GRADING, ETC. RED-LINE DRAWINGS SHALL BE PROVIDED TO THE ENGINEER OF RECORD PRIOR TO REQUESTING FINAL INSPECTION.
3. ALL CONSTRUCTION SHALL BE EXECUTED AS SHOWN ON THESE PLANS. ANY REVISIONS AND/OR DEVIATIONS MUST BE APPROVED THROUGH THE ENGINEER OF RECORD AND MAY RESULT IN ADDITIONAL PERMITTING EFFORTS THROUGH THE RELATED PERMITTING AGENCY.
4. UNLESS OTHERWISE NOTED ON PLANS, OR WITHIN THE PROJECT SPECIFICATIONS, ALL MATERIALS AND CONSTRUCTION ARE TO BE IN ACCORDANCE WITH DESIGN AND CONSTRUCTION STANDARDS OF THE PERMITTING AGENCY HAVING JURISDICTION; THE LOCALLY ADOPTED BUILDING CODE; AND ALL APPLICABLE LOCAL AND STATE CODES AND ORDINANCES.
5. PERMITS MAY BE REQUIRED FOR ANY WORK IN THE PUBLIC RIGHT-OF-WAY. THE CONTRACTOR IS TO ACKNOWLEDGE AND SECURE ALL PERMITS AND INSPECTIONS REQUIRED FOR WORK WITHIN PUBLIC RIGHT-OF-WAY.
6. THIS PARCEL OF LAND MAY BE SUBJECT TO ANY AND ALL RECORDED (AND POSSIBLY UNRECORDED) EASEMENTS, RESTRICTIONS AND COVENANTS.
7. PRIOR TO COMMENCEMENT OF WORK, THE CONTRACTOR SHALL CONTACT ALL UTILITY COMPANIES FOR VERIFICATION OF UTILITIES WITHIN THE LIMITS OF CONSTRUCTION. CALL AREA ONE CALL SYSTEM 48 HOURS PRIOR TO ANY EXCAVATION.
8. THE CONTRACTOR IS TO VERIFY ALL DIMENSIONS PRIOR TO THE START OF CONSTRUCTION. ANY DISCREPANCIES SHALL BE REPORTED TO THE ENGINEER IN A TIMELY MANNER.
9. THE CONTRACTOR SHALL TAKE ALL PRECAUTIONS NECESSARY TO PROTECT EXISTING PERMANENT SURVEYING MONUMENTS AND BENCHMARKS FROM DISTURBANCE. SURVEY MONUMENTS DISTURBED BY CONSTRUCTION ARE TO BE REPLACED AND ADJUSTED VIA A LAND SURVEYOR REGISTERED IN THE STATE FOR WHICH THE PROJECT IS LOCATED.
10. NO BLASTING OR BURNING IS ALLOWED ON THE PROJECT, UNLESS OTHERWISE NOTED OR DIRECTED BY THE ENGINEER.
11. IT IS NOT EXPECTED THAT HAZARDOUS MATERIALS WILL BE ENCOUNTERED. HOWEVER, IF MATERIALS SUSPECTED OF CONTAINING HAZARDOUS MATERIALS ARE ENCOUNTERED, DO NOT DISTURB; IMMEDIATELY NOTIFY ENGINEER AND OWNER. HAZARDOUS MATERIALS WILL BE REMOVED BY OWNER UNDER A SEPARATE CONTRACT.
12. INSTALL TEMPORARY FENCING AROUND TREE PROTECTION ZONES TO PROTECT TREES AND VEGETATION “DESIGNATED TO REMAIN” FROM CONSTRUCTION DAMAGE. MAINTAIN TEMPORARY FENCING AROUND TREE PROTECTION ZONES, AND REMOVE WHEN CONSTRUCTION IS COMPLETE.
13. PRIOR TO COMMENCEMENT OF ANY CLEARING AND EXCAVATION WITHIN A WORK AREA, ALL EROSION AND SEDIMENT CONTROL MEASURES SHALL BE INSTALLED AND IN WORKING ORDER.
14. THE CONTRACTOR SHALL REFERENCE THE “STORMWATER POLLUTION PREVENTION PLAN (SWPPP),” THE “EROSION AND SEDIMENT CONTROL PLAN(S),” AND, RELATED “EROSION AND SEDIMENT CONTROL DETAIL(S)” CONTAINED WITHIN THIS PLAN SET FOR DETAILED INFORMATION CONCERNING EROSION AND SEDIMENT CONTROL “BEST MANAGEMENT PRACTICES” TO BE USED ON THIS PROJECT.
15. IN THE EVENT OF ANY UNFORESEEN CONDITIONS THAT ARE ENCOUNTERED AND NOT COVERED BY THESE PLANS DURING SITEWORK OPERATIONS, THE ENGINEER SHALL BE IMMEDIATELY NOTIFIED FOR DIRECTION.
16. IT IS THE RESPONSIBILITY OF THE CONTRACTOR TO PERFORM ALL NECESSARY CUTS AND FILLS WITHIN THE LIMITS OF THIS PROJECT AND RELATED OFF-SITE WORK SO AS TO ESTABLISH THE DESIRED SUBGRADE, FINISH GRADES AND SLOPES SPECIFIED WITHIN THE PLANS.
17. ADEQUATE SHORING IS TO BE DESIGNED AND PROVIDED BY THE CONTRACTOR TO PREVENT UNDERMINING OF ANY ADJACENT FEATURES OR FACILITIES AND/OR CAVING OF THE EXCAVATION. ALL SHORING AND ASSOCIATED TEMPORARY STRUCTURES SHALL BE DESIGNED BY A LICENSED PROFESSIONAL AND INSTALLED PURSUANT TO O.S.H.A. REQUIREMENTS.
18. TESTING AGENCY: HASKELL OR THE OWNER WILL ENGAGE A QUALIFIED INDEPENDENT GEOTECHNICAL ENGINEERING TESTING AGENCY TO PERFORM FIELD QUALITY CONTROL TESTING.
19. ALL FIELD QUALITY CONTROL TESTS THAT FAIL TO MEET THE SPECIFIED CONPACTION DENSITY SHALL BE REPORTED TO THE ENGINEER.
20. THE CONTRACTOR SHALL MAINTAIN RECORD DRAWINGS DURING CONSTRUCTION WHICH SHOW THE CONSTRUCTED CONDITIONS OF ALL WORK INSTALLED. SEE “AS-BUILT” REQUIREMENTS FOR ADDITIONAL INFORMATION.
21. ALL SANITARY SEWER LINES SHALL BE TELEVISED AND THE VIDEO REPORTS SUBMITTED TO THE ENGINEER FOR REVIEW.
    a. VIDEO REPORTS ARE TO BE SUBMITTED ON CD-ROM OR DVD COMPACT DISKS.
    b. ALL LINES MUST BE FLUSHED AND CLEANED WITH POTABLE WATER PRIOR TO TELEVISING.
    c. VIDEO REPORTS WILL BE USED TO VIEW THE CONDITION OF THE SANITARY SEWER PIPE PRIOR TO ACCEPTANCE. WORKMANSHIP AND CLEANLINESS OF THE INSTALLATION WILL BE CHECKED.
22. ALL STORM SEWER LINES SHALL BE TELEVISED AND THE VIDEO REPORTS SUBMITTED TO THE ENGINEER FOR REVIEW.
    a. VIDEO REPORTS ARE TO BE SUBMITTED ON CD-ROM OR DVD COMPACT DISKS.
    b. ALL LINES MUST BE FLUSHED AND CLEANED WITH POTABLE WATER PRIOR TO TELEVISING.
    c. FOR SUBMERGED SYSTEMS, POND WATER LEVELS SHALL BE LOWERED (PUMPED DOWN) BELOW THE LOWEST PIPE ENTRANCE INVERT.
    d. VIDEO REPORTS WILL BE USED TO VIEW THE CONDITION OF THE STORM SEWER PIPE PRIOR TO ACCEPTANCE. WORKMANSHIP AND CLEANLINESS OF THE INSTALLATION WILL BE CHECKED.
23. AS-BUILT SURVEY: THE CONTRACTOR SHALL VERIFY STORM SEWER IMPROVEMENTS ALIGNMENT BY PROVIDING AN “AS-BUILT” SURVEY OF CONSTRUCTED CONDITIONS FROM A LICENSED SURVEYOR REGISTERED IN THE STATE OF PROJECT LOCATION. THE “AS-BUILT” SURVEY SHALL INCLUDE VERTICAL AND HORIZONTAL INFORMATION PERTAINING TO THE INSTALLATION OF THE STORM SEWER SYSTEM PIPING AND STRUCTURES. DATUM ELEVATION AND BENCHMARK LOCATIONS SHALL BE INDICATED.

INFORMATION TO BE INCLUDED IS AS FOLLOWS:
    a. PIPE TYPE, SIZE, AND INVERT ELEVATIONS.
    b. MANHOLE, DROP INLET, CURB INLET, YARD DRAIN, AND POND CONTROL STRUCTURE LOCATIONS WITH ELEVATIONS OF BOTTOM, RIM OR GRATE ELEVATION SHOWN.
    c. POND CONTROL STRUCTURES: SHOW INFORMATION ON ALL FLOW CONTROL APPURTENANCES AND OUTLET PIPING.

SIGNATURE BLOCK

CONTACT INFORMATION

ENGINEER-OF-RECORD:
JOSHUA R. HOUGH
LICENSE NUMBER: PEN.0031834
HASKELL ARCHITECTS AND ENGINEERS, P.C.
111 RIVERSIDE AVENUE
JACKSONVILLE, FL 32202
(904) 791-4744
JOSHUA.HOUGH@HASKELL.COM

PROJECT CONTACT:
KEVIN J. CRUMP, P.E.
HASKELL ARCHITECTS AND ENGINEERS, P.C.
111 RIVERSIDE AVENUE
JACKSONVILLE, FL 32202
(904) 791-4500
KEVIN.CRUMP@HASKELL.COM

OWNER/DEVELOPER:
FRITO-LAY INC.
7701 LEGACY DR.
PLANO, TX 75024

SITE ADDRESS:
1886 UPPER MAPLE ST.
DAYILLE, CT 06241

NAME OF PROJECT:
YELLIN TRAILER PARKING LOT
1886 UPPER MAPLE ST.
DAYVILLE, CT 06241

ONE CALL SYSTEM

CBYD.COM 811 Call Before You Dig, Inc.

JOSHUA R. HOUGH
CIVIL ENGINEER
STATE OF CONNECTICUT JOSHUA R. HOUGH 31834 LICENSED PROFESSIONAL ENGINEER
REG. NO. 31834

HASKELL ARCHITECTS and ENGINEERS , P.C.
CONNECTICUT- Architecture and Engineering # 0000056
The Haskell Company
111 Riverside Avenue
Jacksonville, Florida 32202
Phone # (904) 791-4500
HASKELL

YELLIN TRAILER PARKING LOT

Frito Lay Good fun!

No	DESCRIPTION	DATE
K	CRPI	03/12/21
I	CPI_EVER	02/16/21
G	CPI	01/21/21

We hereby expressly reserve the property rights to this drawing and it is not to be reproduced, copied in any format or manner whatsoever without first obtaining our express written permission and consent

DRAWN BY:	CHECKED BY:
SBC/MSL	JRH

AE JOB NUMBER
3401365

COVER SHEET

1C-001
SHEET NUMBER

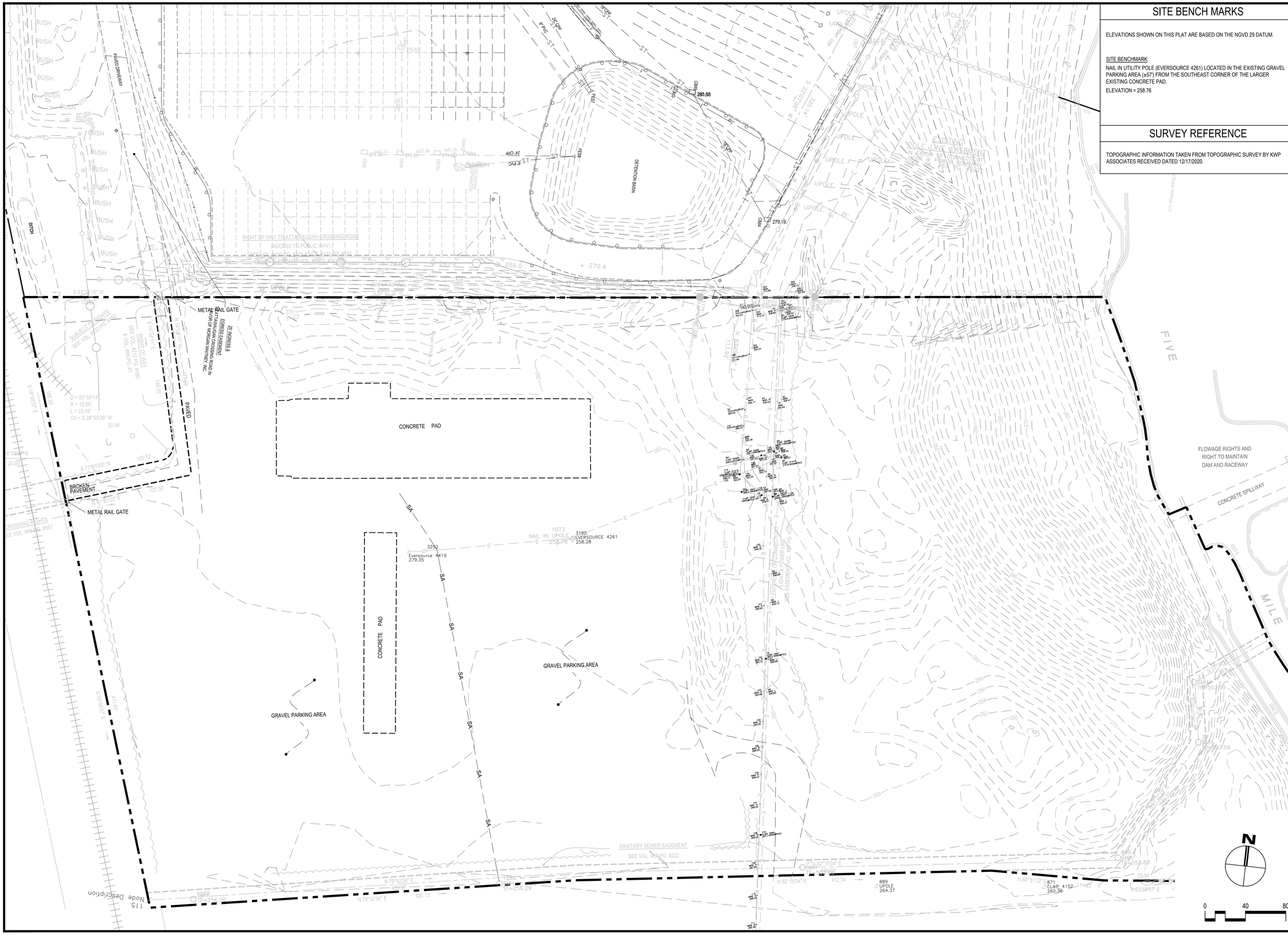

SITE BENCH MARKS

ELEVATIONS SHOWN ON THIS PLAT ARE BASED ON THE NGVD 29 DATUM.

SITE BENCHMARK:
NAIL IN UTILITY POLE (EVERSOURCE 4261) LOCATED IN THE EXISTING GRAVEL PARKING AREA (±57') FROM THE SOUTHEAST CORNER OF THE LARGER EXISTING CONCRETE PAD.
ELEVATION = 258.76

SURVEY REFERENCE

TOPOGRAPHIC INFORMATION TAKEN FROM TOPOGRAPHIC SURVEY BY KWP ASSOCIATES RECEIVED DATED 12/17/2020.

JOSHUA R. HOUGH
CIVIL ENGINEER
STATE OF CONNECTICUT
21864
PROFESSIONAL ENGINEER
REG. NO.

HASKELL ARCHITECTS and ENGINEERS, P.C.
CONNECTICUT- Architecture and Engineering # 0000056
HASKELL
The Haskell Company
111 Riverside Avenue
Jacksonville, Florida 32202
Phone # (904) 791-4500

YELLIN TRAILER PARKING LOT

No	DESCRIPTION	DATE
K	CRPI	03/12/21
I	CPI_EVER	02/16/21
G	CPI	01/21/21

We hereby expressly reserve the property rights to this drawing and it is not to be reproduced, copied in any format or manner whatsoever without first obtaining our express written permission and consent.

DRAWN BY: SBC/MSL
CHECKED BY: JRH

AE JOB NUMBER
3401365

EXISTING CONDITIONS

1C-100
SHEET NUMBER

XREF: 3401365201_LOGFILE- Phase 1 Yellin [P:\340_FoodBev\3401365 Frito Lay Project Knight\Design-Working\Common\Tables\3401365201_LOGFILE- Phase 1 Yellin.dwg]
XREF: 3401365201ICM-01-YELLEN [..\..\05 Model Files\Phase 1 Yellin Lot\3401365201ICM-01-YELLEN.dwg]
XREF: 3401365201ICM-01 [..\..\05 Model Files\3401365201ICM-01.dwg]
P:\340_FoodBev\3401365 Frito Lay Project Knight\Design-Working\Civil\Auto\CAD\06 Sheet Files\PHASE 1 YELLIN LOT\3401365201_1C-100.dwg Layout Name: 1C-100 Mar 12, 2021 - 10:43am PLOTTED BY: MSLyons

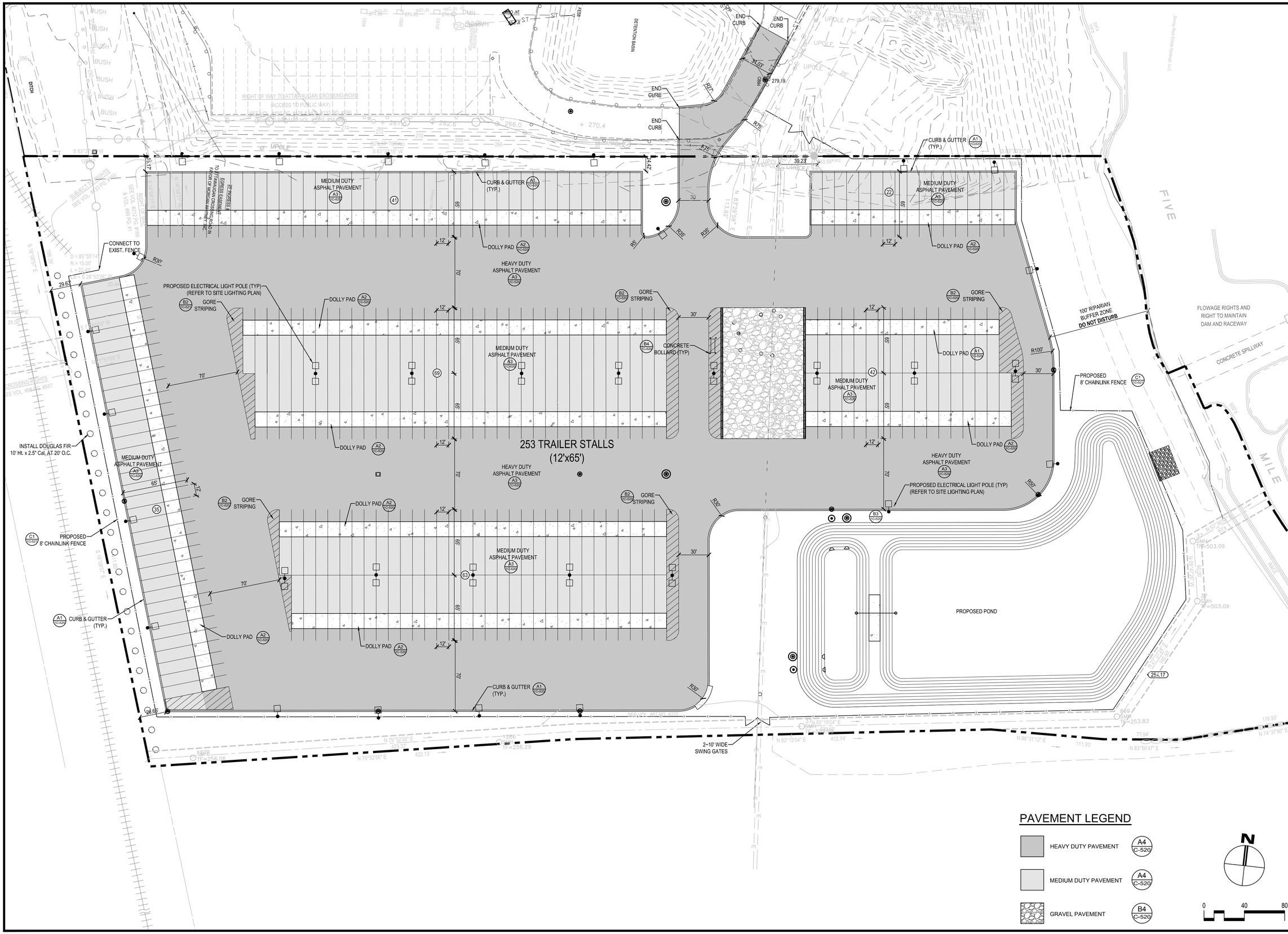

HASKELL ARCHITECTS and ENGINEERS, P.C.
CONNECTICUT- Architecture and Engineering # 0000056

HASKELL

The Haskell Company
111 Riverside Avenue
Jacksonville, Florida 32202
Phone # (904) 791-4500

JOSHUA R. HOUGH
CIVIL ENGINEER
STATE OF CONNECTICUT
PROFESSIONAL ENGINEER
21684
03-12-21
REGISTERED

YELLIN TRAILER PARKING LOT

Frito Lay
Good fun!

No	DESCRIPTION	DATE
K	CRPI	03/12/21
I	CPI_EVER	02/16/21
G	CPI	01/21/21

We hereby expressly reserve the property rights to this drawing and it is not to be reproduced, copied in any format or manner whatsoever without first obtaining our express written permission and consent.

DRAWN BY: SBC/MSL
CHECKED BY: JRH

AE JOB NUMBER
3401365

GEOMETRY PLANS

1C-120
SHEET NUMBER

XREF: 3401365201_LOGFILE - Phase 1 Yellin (P:\340_FoodBev\3401365 Frito Lay Project Knight\Design-Working\Common\Tiledocks\3401365201_LOGFILE - Phase 1 Yellin.dwg]
XREF: 3401365201C1M-21 [..\..\05 model files\phase 1 Yellin Lot\3401365201C1M-21.dwg]
XREF: 3401365201C1M-41 [..\..\05 Model Files\Phase 1 Yellin Lot\3401365201C1M-41.dwg]
XREF: 3401365201C1M-61 [..\..\05 Model Files\Phase 1 Yellin Lot\3401365201C1M-61.dwg]
XREF: 3401365201C1M-01-YELLEN [..\..\05 Model Files\Phase 1 Yellin Lot\3401365201C1M-01-YELLEN.dwg]
XREF: 3401365201C1M-01 [..\..\05 Model Files\3401365201C1M-01.dwg]
P:\340_FoodBev\3401365 Frito Lay Project Knight\Design-Working\CIVL\AutoCAD\06 Sheet Files\PHASE 1 YELLIN LOT\3401365201_1C-120.dwg Layout Name: 1C-120 Mar 12, 2021 - 11:28am PLOTTED BY: MSLyons

LIGHT POLES

POINT #	DESCRIPTION	NORTHING	EASTING
5	LT-POLE	374805.13	834158.49
6	LT-POLE	374813.70	834248.02
7	LT-POLE	374713.37	834301.97
8	LT-POLE	374523.50	834343.61
9	LT-POLE	374457.61	834182.42
12	LT-POLE	374222.77	833900.66
13	LT-POLE	374211.42	833801.31
14	LT-POLE	374198.32	833702.17

LIGHT POLES

POINT #	DESCRIPTION	NORTHING	EASTING
15	LT-POLE	374188.72	833602.63
16	LT-POLE	374261.71	833464.64
17	LT-POLE	374364.30	833431.43
18	LT-POLE	374467.63	833398.63
19	LT-POLE	374547.27	833373.44
20	LT-POLE	374629.24	833410.13
21	LT-POLE	374732.71	833446.56
22	LT-POLE	374743.48	833542.22

LIGHT POLES

POINT #	DESCRIPTION	NORTHING	EASTING
23	LT-POLE	374755.46	833649.63
24	LT-POLE	374764.84	833745.10
25	LT-POLE	374776.87	833852.42
26	LT-POLE	374711.29	833923.89
27	LT-POLE	374609.99	834291.86
28	LT-POLE	374597.04	834192.68
29	LT-POLE	374586.24	834096.51
30	LT-POLE	374574.73	833994.80

LIGHT POLES ARE 39' IN HEIGHT FROM FINISHED PAVEMENT ELEVATION.

LIGHT POLES

POINT #	DESCRIPTION	NORTHING	EASTING
31	LT-POLE	374565.04	833900.89
32	LT-POLE	374553.61	833805.34
33	LT-POLE	374541.62	833697.16
34	LT-POLE	374530.85	833602.27
35	LT-POLE	374371.05	833976.03
36	LT-POLE	374360.10	833874.81
37	LT-POLE	374349.50	833779.59
38	LT-POLE	374339.00	833684.17

LIGHT POLES

POINT #	DESCRIPTION	NORTHING	EASTING
39	LT-POLE	374235.85	833999.80
40	LT-POLE	374325.66	833594.39

GRADING AND DRAINAGE LEGEND

× 00.00±	EXISTING SPOT ELEVATION
(0.00)	PROPOSED SPOT ELEVATION ON PAVEMENT
ST-XX	PROPOSED STORM STRUCTURE
P-XX	PROPOSED STORM PIPE

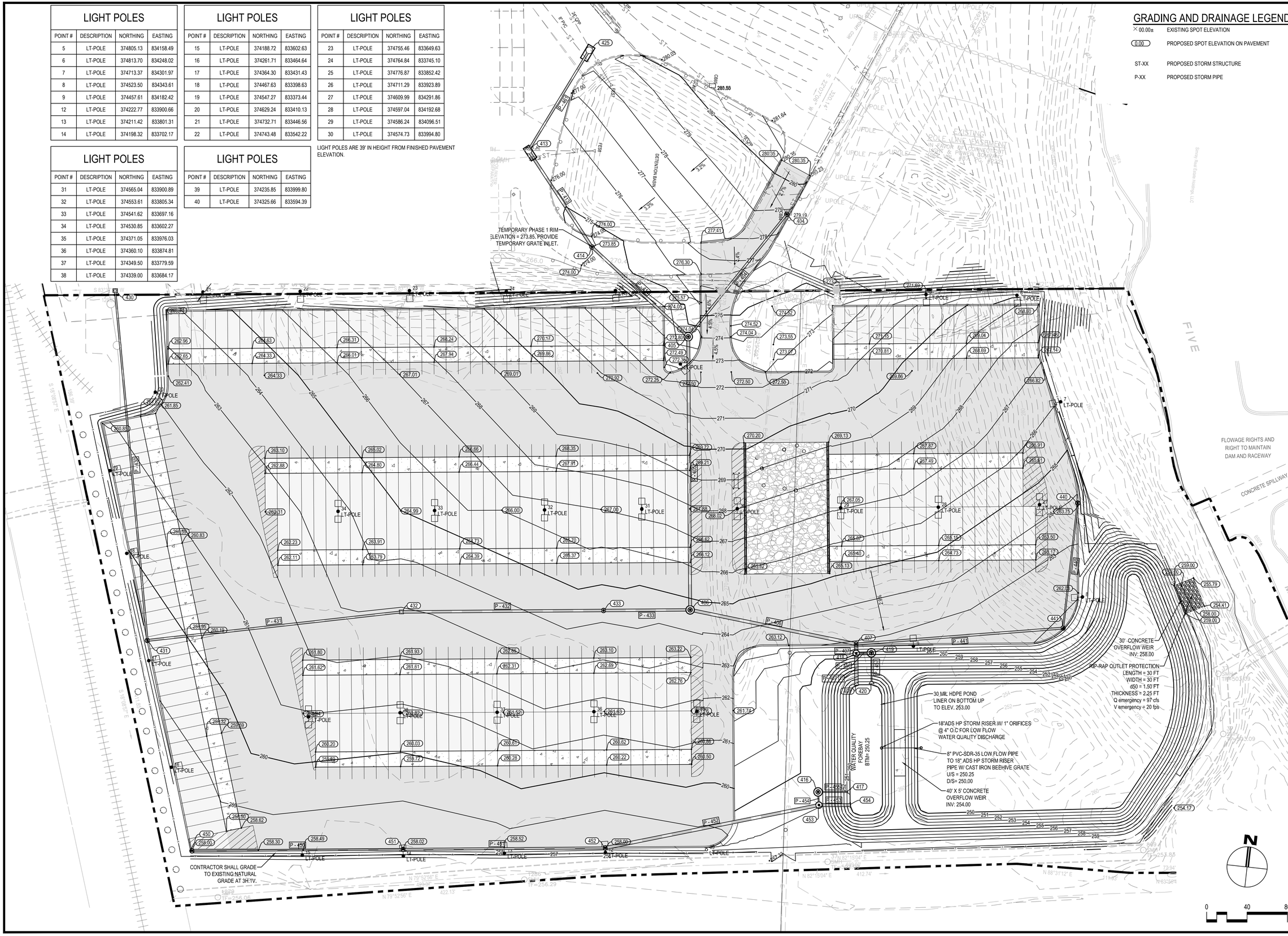

JOSHUA R. HOUGH
CIVIL ENGINEER
CIVIL CONSULTANT
STATE OF CONNECTICUT
21864
PROFESSIONAL ENGINEER
REG. NO. 21864

HASKELL ARCHITECTS and ENGINEERS, P.C.
CONNECTICUT- Architecture and Engineering # 0000056
HASKELL
The Haskell Company
111 Riverside Avenue
Jacksonville, Florida 32202
Phone # (904) 791-4500

YELLIN TRAILER PARKING LOT

Frito Lay Good fun!

No	DESCRIPTION	DATE
K	CRPI	03/12/21
I	CPI_EVER	02/16/21
G	CPI	01/21/21

We hereby expressly reserve the property rights to this drawing and it is not to be reproduced, copied in any format or manner whatsoever without first obtaining our express written permission and consent.

DRAWN BY:	CHECKED BY:
SBC/MSL	JRH

AE JOB NUMBER
3401365

GRADING AND DRAINAGE PLAN

1C-140
SHEET NUMBER

P:\340_FoodBev\3401365 Frito Lay Project Knight\Design-Working\Civil\AutoCAD\06 Sheet Files\PHASE 1 YELLIN LOT\3401365201_1C-140.dwg Layout Name: 1C-140 Mar 12, 2021 - 10:44am PLOTTED BY: MSLyons
XREF: 3401365201 LODFILE - Phase 1 Yellin (P:\340_FoodBev\3401365 Frito Lay Project Knight\Design-Working\Common\Tiebacks\3401365201_LODFILE - Phase 1 Yellin.dwg]
XREF: 3401365201CM-42 [..\05 Model Files\Phase 1 Yellin Lot\3401365201CM-42.dwg]
XREF: 3401365201CM-41 [..\05 Model Files\Phase 1 Yellin Lot\3401365201CM-41.dwg]
XREF: 3401365201CM-92 [..\05 Model Files\Phase 1 Yellin Lot\3401365201CM-92.dwg]
XREF: 3401365201CM-01-YELLEN [..\05 Model Files\Phase 1 Yellin Lot\3401365201CM-01-YELLEN.dwg]
XREF: 3401365201CM-01 [..\05 Model Files\Phase 1 Yellin Lot\3401365201CM-01.dwg]

PIPE TABLE

PIPE ID	UP/STREAM STRUCTURE	DOWN/STREAM STRUCTURE	U/S INV	D/S INV	LENGTH (FT)	PIPE SIZE (IN)	PIPE MATERIAL
P - 404	404	405	271.50	269.50	155.65	24"	HP STORM PP
P - 405	405	406	266.00	258.00	270.33	36"	HP STORM PP
P - 406	406	407	252.84	252.00	167.70	36"	HP STORM PP
P - 407	407	418	252.00	251.95	9.14	42"	HP STORM PP
P - 407 (1)	418	408	251.95	251.00	29.37	42"	HP STORM PP
P - 413	413	414	270.69	269.55	114.37	30"	HP STORM PP
P - 414	414	405	269.55	268.00	130.18	30"	HP STORM PP
P - 430	430	431	255.50	254.45	347.66	18"	HP STORM PP
P - 431	431	432	254.45	253.70	253.01	24"	HP STORM PP
P - 432	432	433	253.70	253.09	200.00	30"	HP STORM PP
P - 433	433	406	253.09	252.84	85.72	30"	HP STORM PP
P - 440	440	441	259.75	258.00	124.57	15"	HP STORM PP
P - 441	441	407	257.50	254.00	205.42	24"	HP STORM PP
P - 450	450	451	254.00	252.96	208.91	18"	HP STORM PP
P - 451	451	452	252.96	251.95	200.00	24"	HP STORM PP
P - 452	452	453	251.95	250.87	215.66	36"	HP STORM PP
P - 453	453	454	250.87	250.50	29.40	36"	HP STORM PP
P - 454	453	416	250.87	250.65	13.04	12"	HP STORM PP
P - 455	416	417	250.65	250.50	29.56	12"	HP STORM PP
P - 456	418	419	251.95	251.80	15.01	12"	HP STORM PP
P - 457	419	420	251.80	251.50	28.64	12"	HP STORM PP
P - 461	425	413	271.20	270.80	116.04	24"	HP STORM PP

STRUCTURE TABLE

STRUCTURE NAME	TOP ELEV.	PIPES IN	PIPES OUT	DESCRIPTION
404	278.46		271.50 (SW)	CURB INLET
405	274.44	269.50 (NE) 268.00 (NW)	266.00 (S)	84" CONCRETE MH
406	264.65	252.84 (W) 258.00 (N)	252.84 (E)	96" CONC. MH
407	262.91	252.00 (W) 254.00 (E)	252.00 (S)	CURB INLET
408	254.73	251.00 (N)		FLARED END SECTION
413	276.34	270.80 (NE)	270.69 (SE)	14'X6' CONCRETE JUNCTION BOX H-20 RATED EXISTING 24" & 8" INV. NEED TO BE FIELD VERIFIED
414	273.85	269.55 (NW)	269.55 (SE)	72" CONCRETE MH
416	259.21	250.65 (S)	250.65 (E)	6' HYDRO INTERNATIONAL DOWNSTREAM DEFENDER WATER QUALITY UNIT
417	252.11	250.50 (W)		FLARED END SECTION
418	262.25	251.95 (N)	251.95 (S) 251.95 (E)	72" CONC. MH W/ INTERNAL DIVERSION 1C-540 DETAIL C2
419	260.64	251.80 (W)	251.80 (S)	6' HYDRO INTERNATIONAL DOWNSTREAM DEFENDER WATER QUALITY UNIT
420	253.61	251.50 (N)		FLARED END SECTION
425	282.00		271.20 (SW)	14'X6' CONCRETE JUNCTION BOX H-20 RATED EXISTING 24" & 8" INV. NEED TO BE FIELD VERIFIED
430	259.37		255.50 (S)	CATCH BASIN
431	259.40	254.45 (N)	254.45 (E)	CURB INLET
432	262.90	253.70 (W)	253.70 (E)	CATCH BASIN
433	264.32	253.09 (W)	253.09 (E)	CATCH BASIN
440	263.82		259.75 (S)	CURB INLET
441	261.85	258.00 (N)	257.50 (W)	CURB INLET
450	258.00		254.00 (E)	CURB INLET
451	258.00	252.96 (W)	252.96 (E)	CURB INLET
452	258.00	251.95 (W)	251.95 (E)	CURB INLET
453	259.06	250.87 (W)	250.87 (E) 250.87 (N)	72" CONC. MH W/ INTERNAL DIVERSION 1C-540 DETAIL C1
454	254.22	250.50 (W)		FLARED END SECTION

JOSHUA R. HOUGH
CIVIL ENGINEER
STATE OF CONNECTICUT
PROFESSIONAL ENGINEER
27854
REG. NO.

HASKELL ARCHITECTS and ENGINEERS , P.C.
CONNECTICUT- Architecture and Engineering # 0000056
HASKELL
The Haskell Company
111 Riverside Avenue
Jacksonville, Florida 32202
Phone # (904) 791-4500

YELLIN TRAILER PARKING LOT

No	DESCRIPTION	DATE
K	CRPI	03/12/21
I	CPI_EVER	02/16/21

We hereby expressly reserve the property rights to this drawing and it is not to be reproduced, copied in any format or manner whatsoever without first obtaining our express written permission and consent.

DRAWN BY: SBC/MSL
CHECKED BY: JRH

AE JOB NUMBER
3401365

STORM SEWER PIPE AND STRUCTURE TABLES

1C-141
SHEET NUMBER

XREF: 3401365201_LOGFILE - Phase 1 Yellin [P:\340_FoodBev\3401365 Frito Lay Project Knight\Design-Working\Common\Tabdocks\3401365201_LOGFILE - Phase 1 Yellin.dwg]
XREF: 3401365201CM-42 [..\..\05 Model Files\Phase 1 Yellin Lot\3401365201CM-42.dwg]
XREF: 3401365201CM-41 [..\..\05 Model Files\Phase 1 Yellin Lot\3401365201CM-41.dwg]
XREF: 3401365201CM-41 [..\..\05 Model Files\Phase 1 Yellin Lot\3401365201CM-41.dwg]
XREF: 3401365201CM-92 [..\..\05 Model Files\Phase 1 Yellin Lot\3401365201CM-92.dwg]
XREF: 3401365201CM-01:YELLEN [..\..\05 Model Files\Phase 1 Yellin Lot\3401365201CM-01-YELLEN.dwg]
XREF: 3401365201CM-01 [..\..\05 Model Files\3401365201CM-01.dwg]
P:\340_FoodBev\3401365 Frito Lay Project Knight\Design-Working\CIVIL\AutoCAD\06 Sheet Files\PHASE 1 YELLIN LOT\3401365201_1C-140.dwg Layout Name: 1C-141 Mar 12, 2021 - 10:44am PLOTTED BY: MSLyons

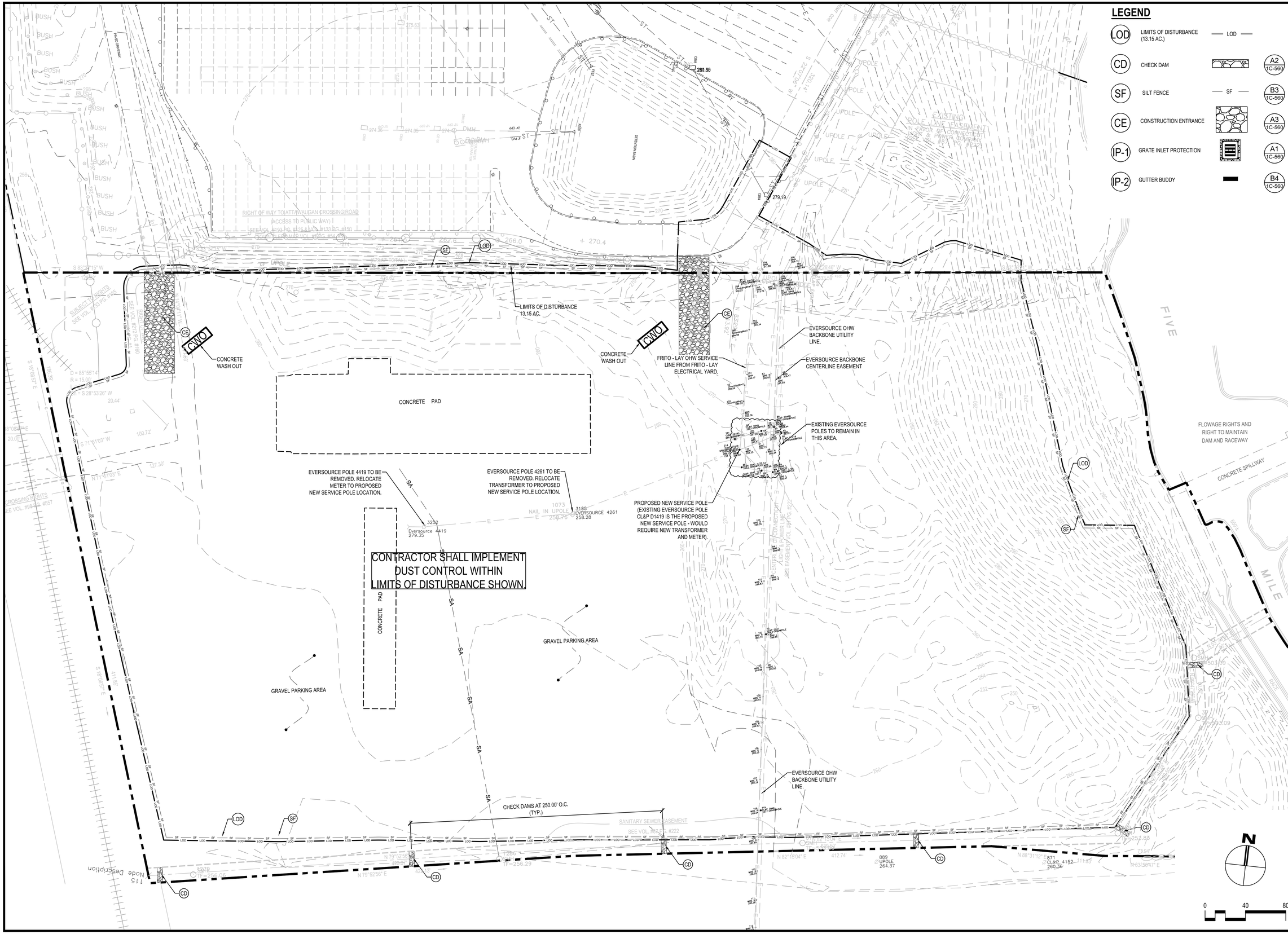

JOSHUA R. HOUGH
CIVIL ENGINEER
STATE OF CONNECTICUT
27854
PROFESSIONAL ENGINEER
REG. NO. 27854

HASKELL ARCHITECTS and ENGINEERS, P.C.
CONNECTICUT- Architecture and Engineering # 0000056

HASKELL

The Haskell Company
111 Riverside Avenue
Jacksonville, Florida 32202
Phone # (904) 791-4500

YELLIN TRAILER PARKING LOT

Frito Lay
Good fun!

No	DESCRIPTION	DATE
K	CRPI	03/12/21
I	CPI_EVER	02/16/21
G	CPI	01/21/21

We hereby expressly reserve the property rights to this drawing and it is not to be reproduced, copied in any format or manner whatsoever without first obtaining our express written permission and consent.

DRAWN BY: SBC/MSL
CHECKED BY: JRH

AE JOB NUMBER
3401365

INITIAL EROSION AND SEDIMENT CONTROL PLAN

1C-161
SHEET NUMBER

P:\340_FoodBev\3401365 Frito Lay Project Knight\Design-Working\Civil\Auto\CAD\06 Sheet Files\PHASE 1 YELLIN LOT\3401365201_1C-161.dwg Layout Name: 1C-161 Mar 12, 2021 - 10:44am PLOTTED BY: MSLyons
XREF: 3401365201 LOGFILE - Phase 1 Yellin [P:\340_FoodBev\3401365 Frito Lay Project Knight\Design-Working\Common\Titleblocks\3401365201_LOGFILE - Phase 1 Yellin.dwg]
XREF: 3401365201CM-01 [L:\05 Model Files\Phase 1 Yellin Lot\3401365201CM-01.dwg]
XREF: 3401365201CM-01 [L:\05 Model Files\3401365201CM-01.dwg]
XREF: 3401365201CM-01-YELLIN [L:\05 Model Files\Phase 1 Yellin Lot\3401365201CM-01-YELLIN.dwg]

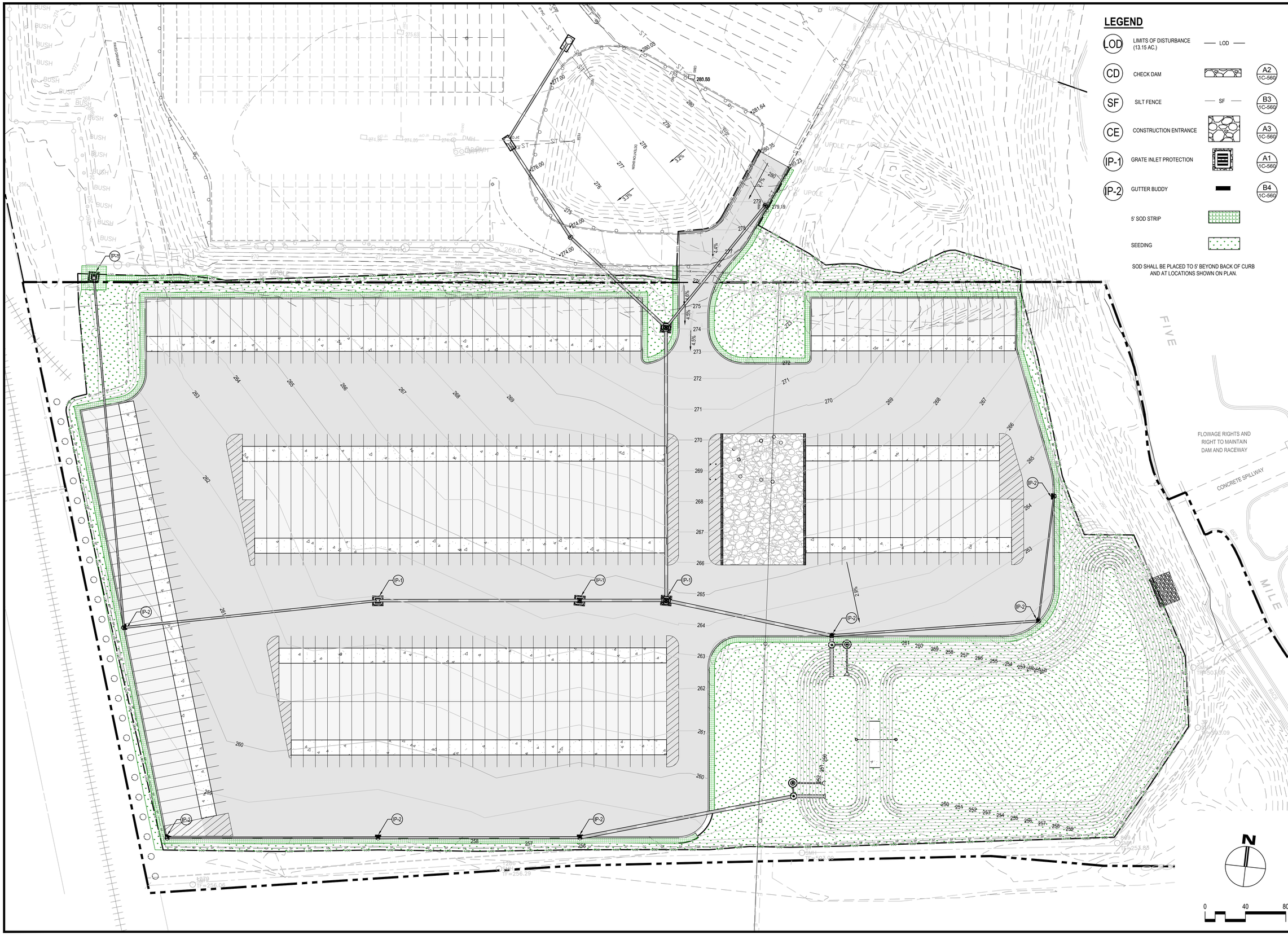

JOSHUA R. HOUGH
CIVIL ENGINEER
STATE OF CONNECTICUT
PROFESSIONAL ENGINEER
27864
REGISTRATION NO.

HASKELL ARCHITECTS and ENGINEERS, P.C.
CONNECTICUT- Architecture and Engineering # 0000056

HASKELL

The Haskell Company
111 Riverside Avenue
Jacksonville, Florida 32202
Phone # (904) 791-4500

YELLIN TRAILER PARKING LOT

Frito Lay
Good fun!

No	DESCRIPTION	DATE
K	CRPI	03/12/21
I	CPI_EVER	02/16/21
G	CPI	01/21/21

We hereby expressly reserve the property rights to this drawing and it is not to be reproduced, copied in any format or manner whatsoever without first obtaining our express written permission and consent.

DRAWN BY:	CHECKED BY:
SBC/MSL	JRH

AE JOB NUMBER
3401365

FINAL EROSION AND SEDIMENT CONTROL PLAN

1C-162
SHEET NUMBER

XREF: 3401365201_LODFILE - Phase 1 Yellin [P:\340_FoodBev\3401365 Frito Lay Project Knight\Design-Working\Common\Tiledocks\3401365201_LODFILE - Phase 1 Yellin.dwg]
XREF: 3401365201CM-21 [...\05 Model Files\Phase 1 Yellin Lot\3401365201CM-21.dwg]
XREF: 3401365201CM-42 [...\05 Model Files\Phase 1 Yellin Lot\3401365201CM-42.dwg]
XREF: 3401365201CM-62 [...\05 Model Files\Phase 1 Yellin Lot\3401365201CM-62.dwg]
XREF: 3401365201CM-41 [...\05 Model Files\Phase 1 Yellin Lot\3401365201CM-41.dwg]
XREF: 3401365201CM-01:YELLEN [...\05 Model Files\Phase 1 Yellin Lot\3401365201CM-01-YELLEN.dwg]
XREF: 3401365201CM-01 [...\05 Model Files\3401365201CM-01.dwg]
XREF: 3401365201CM-92 [...\05 Model Files\Phase 1 Yellin Lot\3401365201CM-92.dwg]
P:\340_FoodBev\3401365 Frito Lay Project Knight\Design-Working\CIVIL\AutoCAD\06 Sheet Files\PHASE 1 YELLIN LOT\3401365201_1C-162.dwg Layout Name: 1C-162 Mar 12, 2021 - 10:45am PLOTTED BY: MSLyons

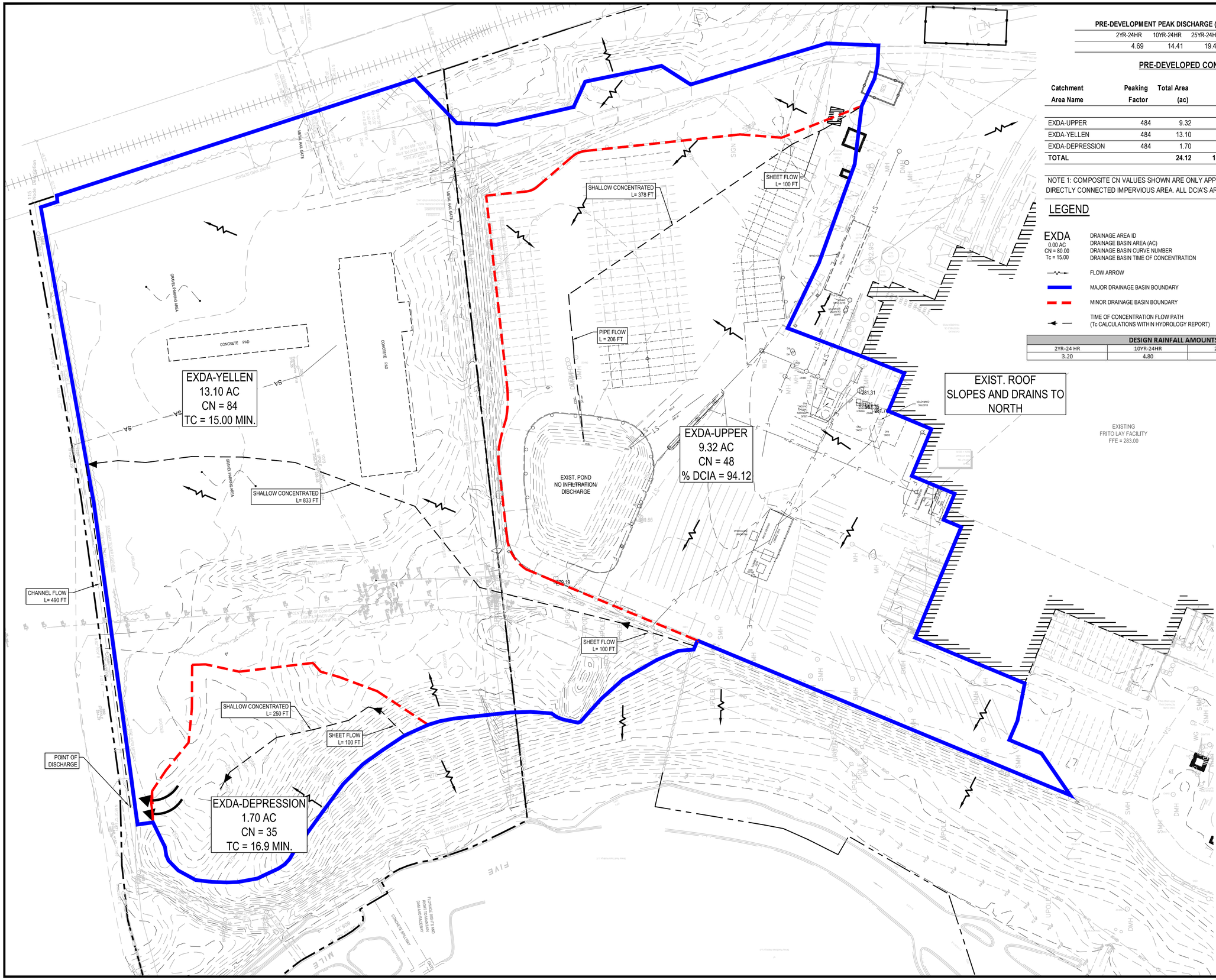

PRE-DEVELOPMENT PEAK DISCHARGE (SOUTH BASIN), CFS

2YR-24HR	10YR-24HR	25YR-24HR	100YR-24HR
4.69	14.41	19.40	30.18

PRE-DEVELOPED CONDITIONS

Catchment Area Name	Peaking Factor	Total Area (ac)	Impervious (ac)	Impervious % DCIA	CN[1]	T_C (min)
EXDA-UPPER	484	9.32	8.8	94.12	48	10.00
EXDA-YELLEN	484	13.10	5.71	-	62.46	15.00
EXDA-DEPRESSION	484	1.70	-	-	32.00	10.00
TOTAL		**24.12**	**14.48**			

NOTE 1: COMPOSITE CN VALUES SHOWN ARE ONLY APPLIED TO THE AREAS NOT CONSIDERED DIRECTLY CONNECTED IMPERVIOUS AREA. ALL DCIA'S ARE ASSIGNED A CN VALUE OF 98.

LEGEND

EXDA 0.00 AC CN = 80.00 Tc = 15.00	DRAINAGE AREA ID DRAINAGE BASIN AREA (AC) DRAINAGE BASIN CURVE NUMBER DRAINAGE BASIN TIME OF CONCENTRATION
	FLOW ARROW
	MAJOR DRAINAGE BASIN BOUNDARY
	MINOR DRAINAGE BASIN BOUNDARY
	TIME OF CONCENTRATION FLOW PATH (Tc CALCULATIONS WITHIN HYDROLOGY REPORT)

DESIGN RAINFALL AMOUNTS (INCHES)			
2YR-24 HR	10YR-24HR	25YR-24HR	100YR-24HR
3.20	4.80	5.50	6.90

0 60 120

JOSHUA R. HOUGH
CIVIL ENGINEER
STATE OF CONNECTICUT
PROFESSIONAL ENGINEER
21864
REGISTRATION NO. 32202

HASKELL ARCHITECTS and ENGINEERS, P.C.
CONNECTICUT- Architecture and Engineering # 0000056
HASKELL
The Haskell Company
111 Riverside Avenue
Jacksonville, Florida 32202
Phone # (904) 791-4500

YELLIN TRAILER PARKING LOT

Frito Lay Good fun!

No	DESCRIPTION	DATE
K	CRPI	03/12/21
I	CPI_EVER	02/16/21
G	CPI	01/21/21

We hereby expressly reserve the property rights to this drawing and it is not to be reproduced, copied in any format or manner whatsoever without first obtaining our express written permission and consent.

DRAWN BY: SBC/MSL
CHECKED BY: JRH

AE JOB NUMBER
3401365

PRE DEVELOPMENT DRAINAGE MAP

1C-170
SHEET NUMBER

XREF: 3401365201_LOGFILE - Phase 1 Yellin [P:\340_FoodBev\3401365 Frito Lay Project Knight\Design-Working\Common\Tiledocks\3401365201_LOGFILE - Phase 1 Yellin.dwg]
XREF: 3401365201CM-71 [L:\05 Model Files\Phase 1 Yellin Lot\3401365201CM-71.dwg]
XREF: 3401365201CM-01-YELLEN [L:\05 Model Files\Phase 1 Yellin Lot\3401365201CM-01-YELLEN.dwg]
XREF: 3401365201CM-01 [L:\05 Model Files\3401365201CM-01.dwg]
P:\340_FoodBev\3401365 Frito Lay Project Knight\Design-Working\CIVIL\AutoCAD\06 Sheet Files\PHASE 1 YELLIN LOT\3401365201_1C-170.dwg Layout Name: 1C-170 Mar 12, 2021 - 10:45am PLOTTED BY: MSLyons

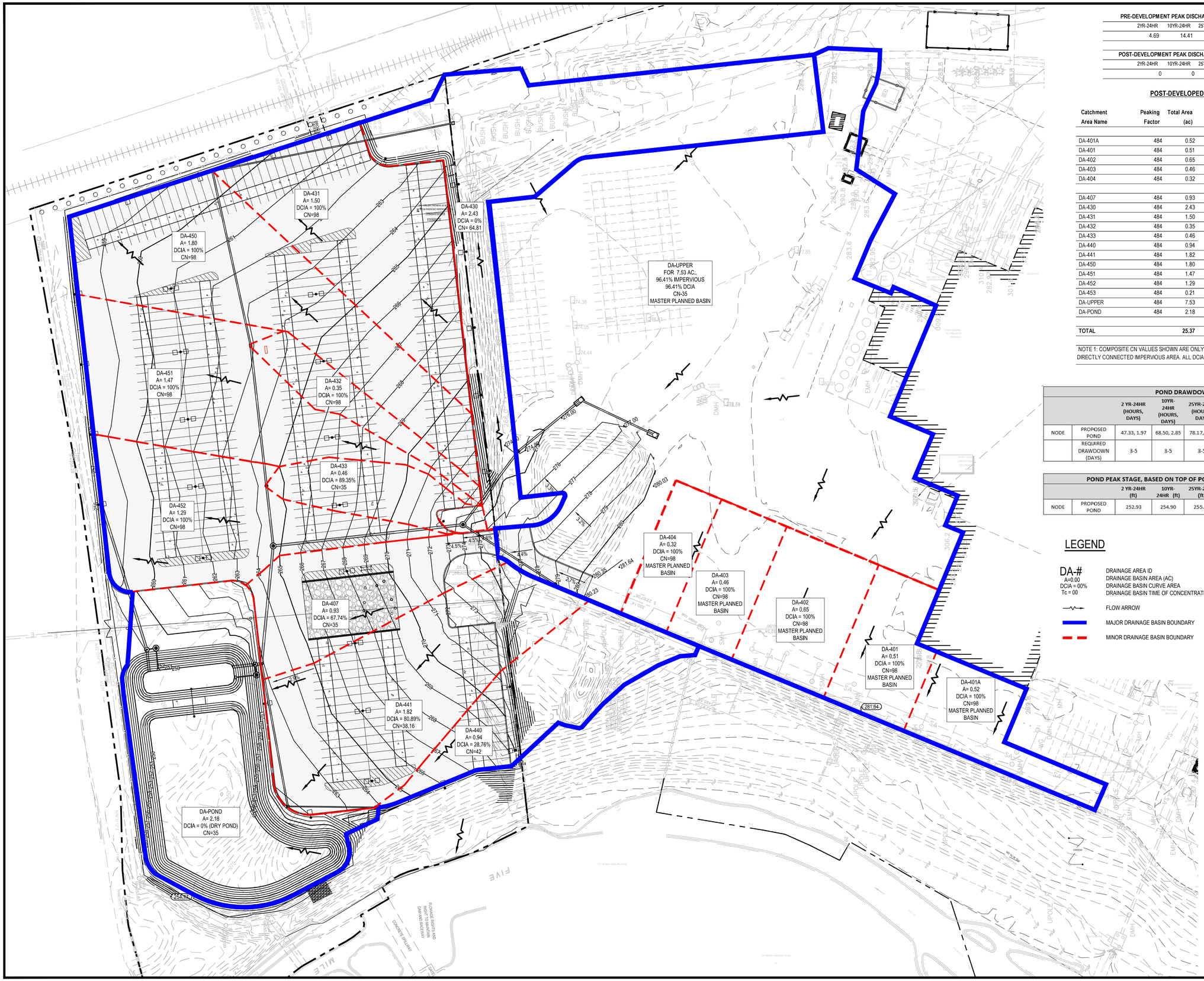

PRE-DEVELOPMENT PEAK DISCHARGE (SOUTH BASIN), CFS

2YR-24HR	10YR-24HR	25YR-24HR	100YR-24HR
4.69	14.41	19.40	30.18

POST-DEVELOPMENT PEAK DISCHARGE (SOUTH BASIN), CFS

2YR-24HR	10YR-24HR	25YR-24HR	100YR-24HR
0	0	0	0

POST-DEVELOPED CONDITIONS

Catchment Area Name	Peaking Factor	Total Area (ac)	Impervious (ac)	Impervious % DCIA	CN[1]	T_c (min)
DA-401A	484	0.52	0.5	100.00	-	5.00
DA-401	484	0.51	0.51	100.00	-	5.00
DA-402	484	0.65	0.65	100.00	-	5.00
DA-403	484	0.46	0.46	100.00	-	5.00
DA-404	484	0.32	0.32	100.00	-	5.00
DA-407	484	0.93	0.63	67.74	38	10.00
DA-430	484	2.43	1.15	-	65	5.00
DA-431	484	1.50	1.50	100.00	-	-
DA-432	484	0.35	0.35	100.00	-	5.00
DA-433	484	0.46	0.41	89.35	35.00	5.00
DA-440	484	0.94	0.34	28.76	42.34	15.00
DA-441	484	1.82	1.49	80.89	38.16	10.00
DA-450	484	1.80	1.80	100.00	-	5.00
DA-451	484	1.47	1.47	100.00	-	5.00
DA-452	484	1.29	1.29	100.00	-	5.00
DA-453	484	0.21	0.21	100.00	-	5.00
DA-UPPER	484	7.53	7.26	96.41	35.00	10.00
DA-POND	484	2.18	-	-	35.00	5.00
TOTAL		**25.37**	**20.36**			

NOTE 1: COMPOSITE CN VALUES SHOWN ARE ONLY APPLIED TO THE AREAS NOT CONSIDERED DIRECTLY CONNECTED IMPERVIOUS AREA. ALL DCIA'S ARE ASSIGNED A CN VALUE OF 98.

POND DRAWDOWN ANALYSIS

		2 YR-24HR (HOURS, DAYS)	10YR-24HR (HOURS, DAYS)	25YR-24HR (HOURS, DAYS	100YR-24HR (HOURS, DAYS)	WQv (HOURS, DAYS)	
NODE	PROPOSED POND	47.33, 1.97	68.50, 2.85	78.17,3.25	98, 4.08	40, 1.67	-
	REQUIRED DRAWDOWN (DAYS)	3-5	3-5	3-5	3-5	3	

POND PEAK STAGE, BASED ON TOP OF POND 259 WITH OVERFLOW 258 (FEET)

		2 YR-24HR (ft)	10YR-24HR (ft)	25YR-24HR (ft)	100YR-24HR (ft)	WQv (ft)	
NODE	PROPOSED POND	252.93	254.90	255.58	256.99	251.80	-

JOSHUA R. HOUGH
CIVIL ENGINEER
STATE OF CONNECTICUT
PROFESSIONAL ENGINEER
REGISTRATION NO. 28364

HASKELL ARCHITECTS and ENGINEERS , P.C.
CONNECTICUT- Architecture and Engineering # 0000056
HASKELL
The Haskell Company
111 Riverside Avenue
Jacksonville, Florida 32202
Phone # (904) 791-4500

YELLIN TRAILER PARKING LOT

Frito Lay Good fun!

No	DESCRIPTION	DATE
I	CPI_EVER	02/16/21
G	CPI	01/21/21

We hereby expressly reserve the property rights to this drawing and it is not to be reproduced, copied in any format or manner whatsoever without first obtaining our express written permission and consent.

DRAWN BY: SBC/MSL
CHECKED BY: JRH

AE JOB NUMBER
3401365

POST DEVELOPMENT DRAINAGE MAP

1C-171
SHEET NUMBER

XREF: 3401365201_LOGFILE - Phase 1 Yellin (P:\340_FoodBev\3401365 Frito Lay Project Knight\Design-Working\Common\Tiledocks\3401365201_LOGFILE - Phase 1 Yellin.dwg)
XREF: 3401365201CM-72 (\\..\05 Model Files\Phase 1 Yellin Lot\3401365201CM-72.dwg)
XREF: 3401365201CM-42 (\\..\05 Model Files\Phase 1 Yellin Lot\3401365201CM-42.dwg)
XREF: 3401365201CM-41 (\\..\05 Model Files\Phase 1 Yellin Lot\3401365201CM-41.dwg)
XREF: 3401365201CM-42 (\\..\05 Model Files\Phase 1 Yellin Lot\3401365201CM-42.dwg)
XREF: 3401365201CM-41 (\\..\05 Model Files\Phase 1 Yellin Lot\3401365201CM-41.dwg)
XREF: 3401365201CM-01 (\\YELLEN\..\05 Model Files\Phase 1 Yellin Lot\3401365201CM-01-YELLEN.dwg)
XREF: 3401365201CM-01 (\..\05 Model Files\3401365201CM-01.dwg)
P:\340_FoodBev\3401365 Frito Lay Project Knight\Design-Working\Civil\Autu\CAD\06 Sheet Files\PHASE 1 YELLIN LOT\3401365201_1C-171.dwg Layout Name: 1C-171 Mar 12, 2021 - 10:45am PLOTTED BY: MSLyons

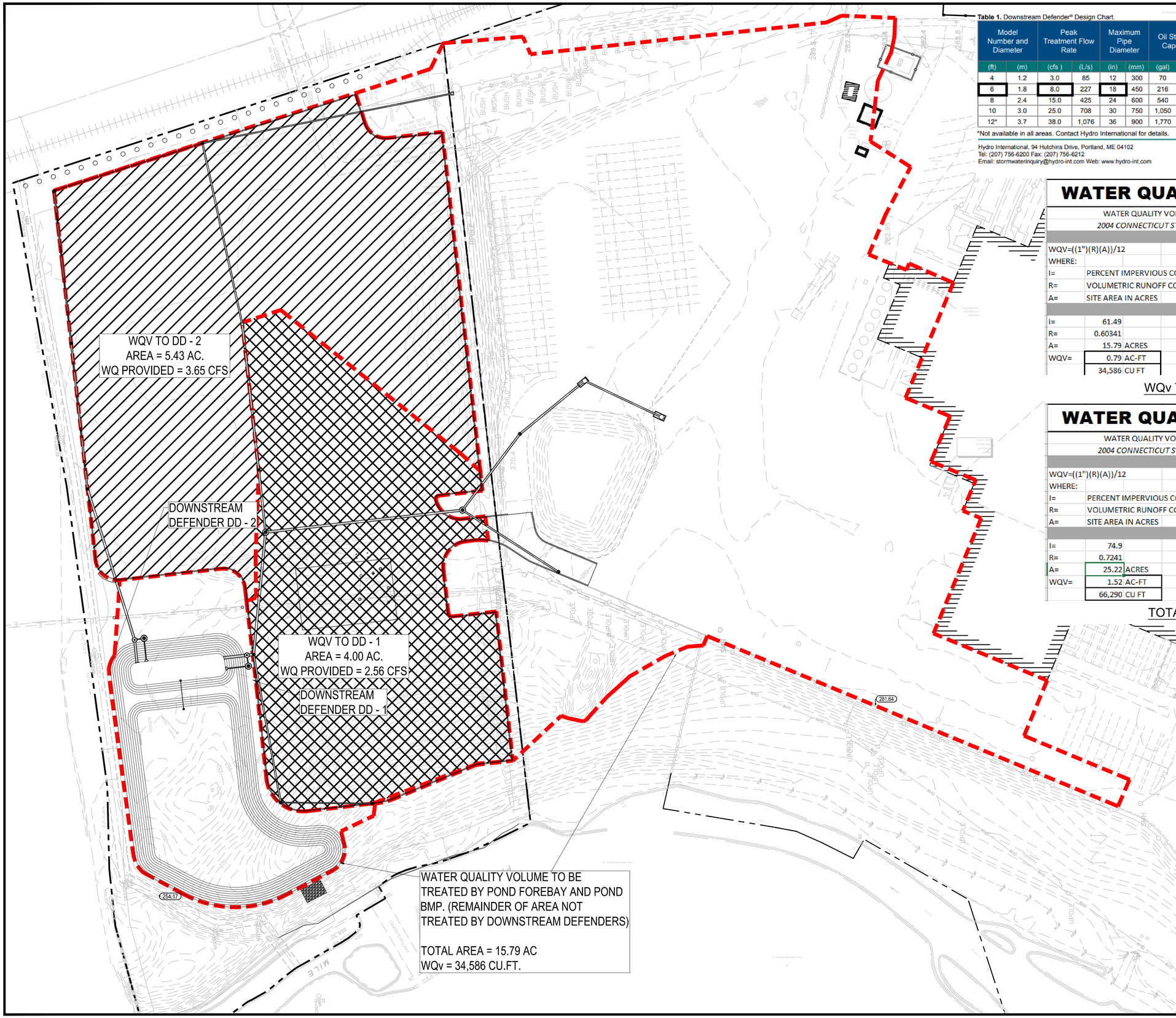

Table 1. Downstream Defender® Design Chart.

Model Number and Diameter		Peak Treatment Flow Rate		Maximum Pipe Diameter		Oil Storage Capacity		Sediment Storage Capacity		Minimum Distance from Outlet Invert to Top of Rim		Standard Height from Outlet Invert to Sump Floor	
(ft)	(m)	(cfs)	(L/s)	(in)	(mm)	(gal)	(L)	(yd^3)	(m^3)	(ft)	(m)	(ft)	(m)
4	1.2	3.0	85	12	300	70	265	0.70	0.53	2.8	0.85	4.1	1.25
6	1.8	8.0	227	18	450	216	818	2.10	1.61	3.2	0.98	5.9	1.80
8	2.4	15.0	425	24	600	540	2,044	4.65	3.56	4.2	1.28	7.7	2.35
10	3.0	25.0	708	30	750	1,050	3,975	8.70	6.65	5.0	1.52	9.4	2.85
12*	3.7	38.0	1,076	36	900	1,770	6,700	14.70	11.24	5.6	1.71	11.2	3.41

*Not available in all areas. Contact Hydro International for details.

Hydro International, 94 Hutchins Drive, Portland, ME 04102
Tel: (207) 756-6200 Fax: (207) 756-6212
Email: stormwaterinquiry@hydro-int.com Web: www.hydro-int.com

Stormwater Solutions
hydro-int.com/dsdefender
DDSS1604

WATER QUALITY VOLUME (WQV)

WATER QUALITY VOLUME (WQV) REQUIREMENTS TAKEN FROM:
2004 CONNECTICUT STORMWATER QUALITY MANUAL; CHAPTER 7.

WQV=((1")(R)(A))/12
WHERE:

I=	PERCENT IMPERVIOUS COVER
R=	VOLUMETRIC RUNOFF COEFFICIENT=0.05+0.009(I)
A=	SITE AREA IN ACRES

I=	61.49	
R=	0.60341	
A=	15.79	ACRES
WQV=	0.79	AC-FT
	34,586	CU FT

WQv TREATED BY POND

WATER QUALITY VOLUME (WQV)

WATER QUALITY VOLUME (WQV) REQUIREMENTS TAKEN FROM:
2004 CONNECTICUT STORMWATER QUALITY MANUAL; CHAPTER 7.

WQV=((1")(R)(A))/12
WHERE:

I=	PERCENT IMPERVIOUS COVER
R=	VOLUMETRIC RUNOFF COEFFICIENT=0.05+0.009(I)
A=	SITE AREA IN ACRES

I=	74.9	
R=	0.7241	
A=	25.22	ACRES
WQV=	1.52	AC-FT
	66,290	CU FT

TOTAL WQv REQUIRED

BMP 1: DOWNSTREAM DEFENDER DD-1
AREA TO BE TREATED = 4.00 AC
WQ FLOW TREATED = 2.56 CFS

BMP 2: DOWNSTREAM DEFENDER DD-2
AREA TO BE TREATED = 5.43 AC
WQ FLOW TREATED = 3.65 CFS

BMP 3: POND FOREBAY AND INFILTRATION BASIN
AREA TO BE TREATED = 15.79 AC
WQv = 34,586 CU.FT.

LEGEND

EFFECTIVE WATER QUALITY VOLUME AREA

WATER QUALITY VOLUME AREA TO DOWN STREAM DEFENDER #1

WATER QUALITY VOLUME AREA TO DOWN STREAM DEFENDER #2

N

0 60 120

JOSHUA R. HOUGH
CIVIL ENGINEER
STATE OF CONNECTICUT
PROFESSIONAL ENGINEER
REG. NO. 27284

HASKELL ARCHITECTS and ENGINEERS, P.C.
CONNECTICUT- Architecture and Engineering # 0000056
The Haskell Company
111 Riverside Avenue
Jacksonville, Florida 32202
Phone # (904) 791-4500
HASKELL

YELLIN TRAILER PARKING LOT

Frito Lay Good fun!

No	DESCRIPTION	DATE
K	CRPI	03/12/21
I	CPI_EVER	02/16/21
G	CPI	01/21/21

We hereby expressly reserve the property rights to this drawing and it is not to be reproduced, copied in any format or manner whatsoever without first obtaining our express written permission and consent.

DRAWN BY: SBC/MSL
CHECKED BY: JRH

AE JOB NUMBER
3401365

BMP DRAINAGE AREA MAP

1C-172
SHEET NUMBER

P:\340_FoodBev\3401365 Frito Lay Project Knight\Design-Working\Civil\AutoCAD\06 Sheet Files\PHASE 1 YELLIN LOT\3401365201_1C-172.dwg Layout Name: 1C-172 Mar 12, 2021 - 10:45am PLOTTED BY: MSLyons
XREF: 3401365201 LOGFILE - Phase 1 Yellin [P:\340_FoodBev\3401365 Frito Lay Project Knight\Design-Working\Common\Tiledcross\3401365201_LOGFILE - Phase 1 Yellin.dwg]
XREF: 3401365201CM-73 [\\JS Model Files\Phase 1 Yellin Lot\3401365201CM-73.dwg]
XREF: 3401365201CM-01-YELLEN [\\JS Model Files\Phase 1 Yellin Lot\3401365201CM-01-YELLEN.dwg]
XREF: 3401365201CM-21 [\\JS Model Files\Phase 1 Yellin Lot\3401365201CM-21.dwg]
XREF: 3401365201CM-02 [\\JS Model Files\Phase 1 Yellin Lot\3401365201CM-02.dwg]
XREF: 3401365201CM-01 [\\JS Model Files\3401365201CM-01.dwg]
XREF: 3401365201CM-41 [\\JS Model Files\Phase 1 Yellin Lot\3401365201CM-41.dwg]
XREF: 3401365201CM-42 [\\JS Model Files\Phase 1 Yellin Lot\3401365201CM-42.dwg]

TEST PIT 1

TEST PIT 2

ADDITIONAL TEST PIT - 3/26/2021

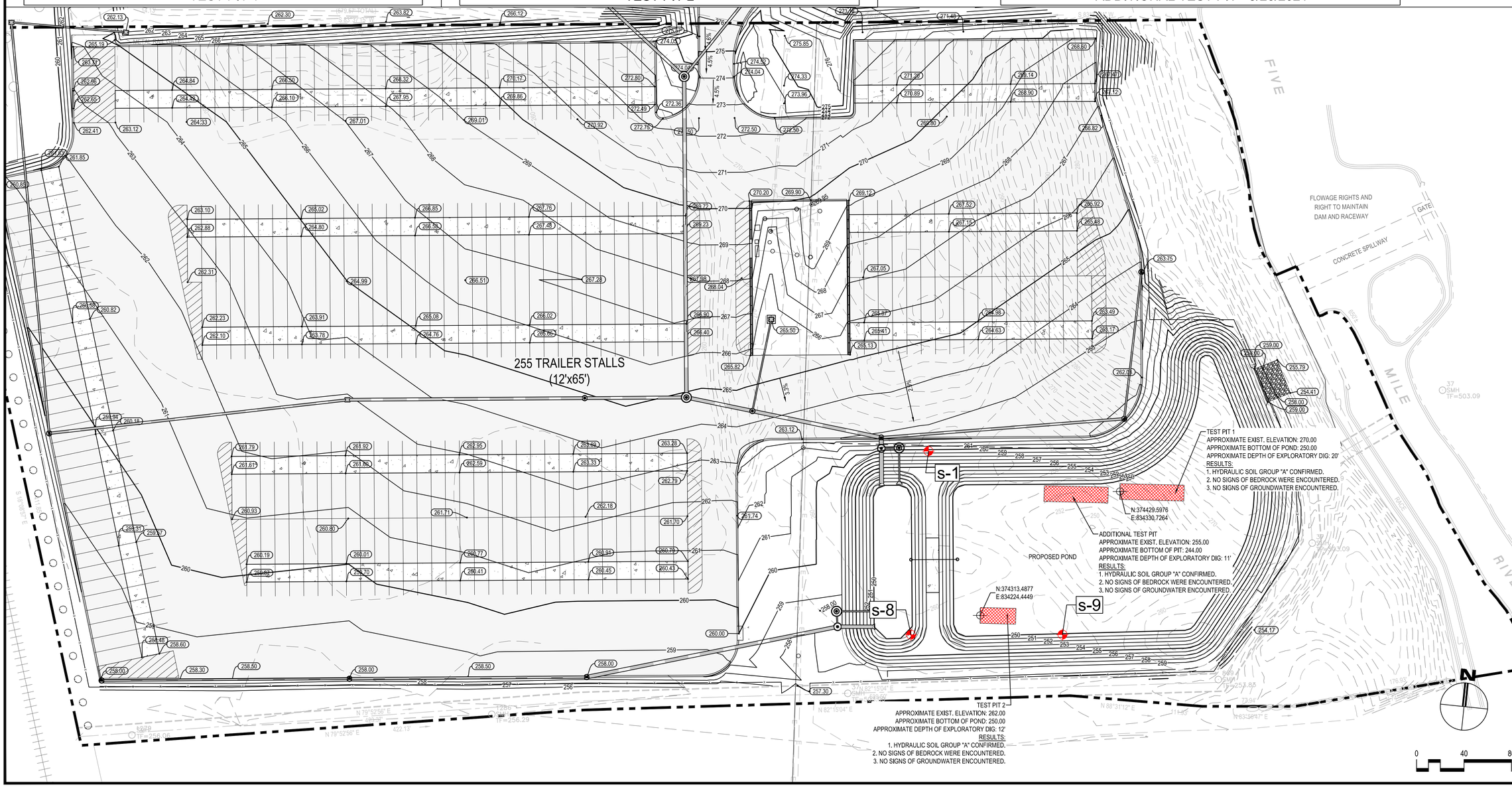

JOSHUA R. HOUGH
CIVIL ENGINEER
PRINCIPAL CONTACT
STATE OF CONNECTICUT
21864
PROFESSIONAL ENGINEER
REG. NO. 21864

HASKELL ARCHITECTS and ENGINEERS, P.C.
CONNECTICUT- Architecture and Engineering # 0000056
HASKELL
The Haskell Company
111 Riverside Avenue
Jacksonville, Florida 32202
Phone # (904) 791-4500

YELLIN TRAILER PARKING LOT

Frito Lay
Good fun!

No	DESCRIPTION	DATE

We hereby expressly reserve the property rights to this drawing and it is not to be reproduced, copied in any format or manner whatsoever without first obtaining our express written permission and consent.

DRAWN BY:	CHECKED BY:
SBC/MSL	JRH

AE JOB NUMBER
3401365

TEST PIT & BORING LOCATIONS

1C-173
SHEET NUMBER

XREF: 3401365201_LOGFILE - Phase 1 Yellin [P:\340_FoodBev\3401365 Frito Lay Project Knight\Design-Working\Common\Titleblocks\3401365201_LOGFILE - Phase 1 Yellin.dwg]
XREF: 3401365201CM-92 [L:\05 Model Files\Phase 1 Yellin Lot\3401365201CM-92.dwg]
XREF: 3401365201CM-01 - YELLIN [L:\05 Model Files\Phase 1 Yellin Lot\3401365201CM-01 - YELLIN.dwg]
XREF: 3401365201CM-211 - TLS EXH [L:\05 Model Files\Phase 1 Yellin Lot\3401365201CM-211 - TLS EXH.dwg]
XREF: 3401365201CM-41 [L:\05 Model Files\Phase 1 Yellin Lot\3401365201CM-41.dwg]
XREF: 3401365201CM-42 [L:\05 Model Files\Phase 1 Yellin Lot\3401365201CM-42.dwg]
P:\340_FoodBev\3401365 Frito Lay Project Knight\Design-Working\Civil\AutoCAD\06 Sheet Files\PHASE 1 YELLIN LOT\3401365201_1C-173.dwg Layout Name: 1C-173 Mar 30, 2021 - 12:52pm PLOTTED BY: MSLyons

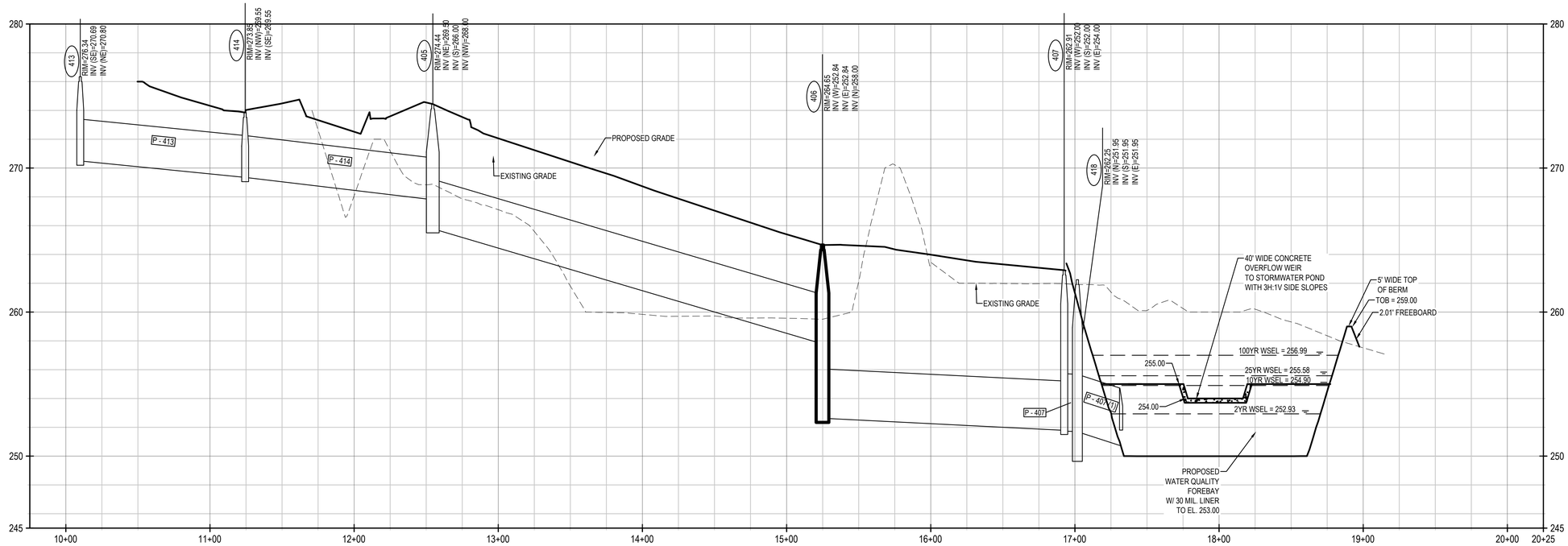

STM 400-NW
HORIZONTAL SCALE: 1" = 40'
VERTICAL SCALE: 1" = 4'

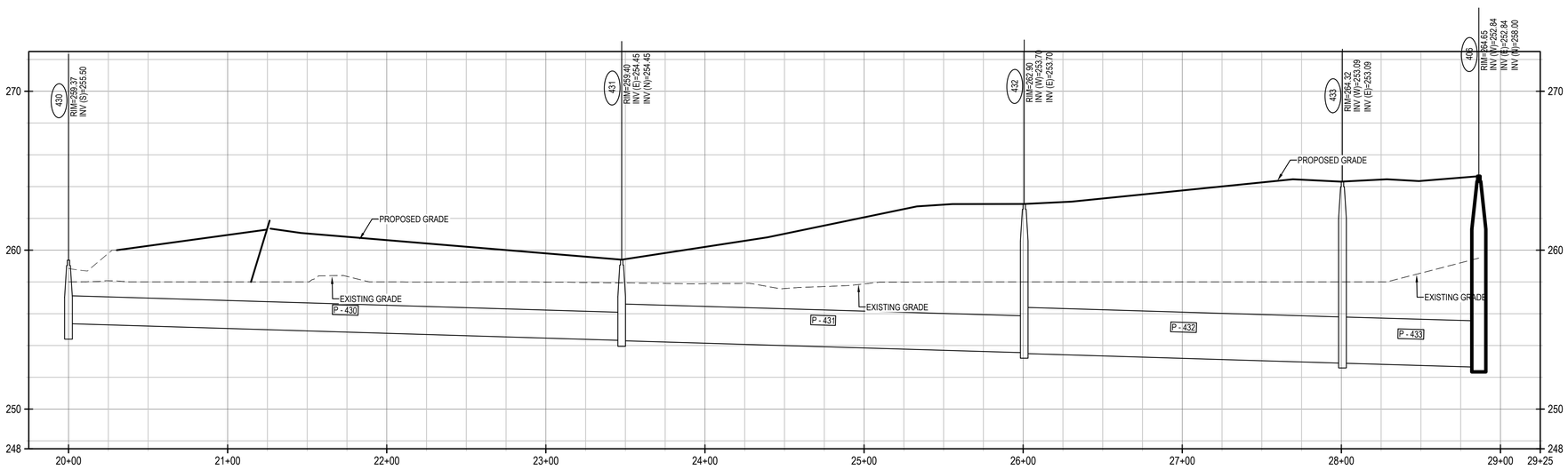

STM 400-W
HORIZONTAL SCALE: 1" = 40'
VERTICAL SCALE: 1" = 4'

NOTE:
HGE AS INDICATED ON THE PLAN ARE SHOWN PER THE ROUTED STORMWATER MODEL FOR THE 10 YEAR - 24 HOUR STORMWATER AS INDICATED IN THE STORMWATER MANAGEMENT PLANS DATED 01/21/2021.

JOSHUA R. HOUGH
CIVIL ENGINEER
CIVIL CONNECTICUT
STATE OF CONNECTICUT
JOSHUA R. HOUGH
21864
PROFESSIONAL ENGINEER
REG. NO. 21864

HASKELL ARCHITECTS and ENGINEERS, P.C.
CONNECTICUT- Architecture and Engineering # 0000056
The Haskell Company
111 Riverside Avenue
Jacksonville, Florida 32202
Phone # (904) 791-4500
HASKELL

YELLIN TRAILER PARKING LOT

No	DESCRIPTION	DATE
K	CRPI	03/12/21
I	CPI_EVER	02/16/21
G	CPI	01/21/21

We hereby expressly reserve the property rights to this drawing and it is not to be reproduced, copied in any format or manner whatsoever without first obtaining our express written permission and consent.

DRAWN BY: SBC/MSL
CHECKED BY: JRH

AE JOB NUMBER
3401365

GRADING AND DRAINAGE PROFILES

1C-241
SHEET NUMBER

XREF: 3401365201_LOGFILE - Phase 1 Yellin [P:\340_FoodBev\3401365 Frito Lay Project Knight\Design-Working\Common\Tiledocks\3401365201_LOGFILE - Phase 1 Yellin.dwg]
XREF: 3401365201CM-92 | _05 Model Files\Phase 1 Yellin Lot\3401365201CM-92.dwg]
XREF: 3401365201CM-45 | _05 Model Files\Phase 1 Yellin Lot\3401365201CM-45.dwg]
XREF: 3401365201CM-41 | _05 Model Files\Phase 1 Yellin Lot\3401365201CM-41.dwg]
XREF: 3401365201CM-44 | _05 Model Files\Phase 1 Yellin Lot\3401365201CM-44.dwg]
XREF: 3401365201CM-42 | _05 Model Files\Phase 1 Yellin Lot\3401365201CM-42.dwg]
XREF: 3401365201CM-43 | _05 Model Files\Phase 1 Yellin Lot\3401365201CM-43.dwg]
P:\340_FoodBev\3401365 Frito Lay Project Knight\Design-Working\CIVIL\AutoCAD\06 Sheet Files\PHASE 1 YELLIN LOT\3401365D1_1C-241.dwg Layout Name: 1C-241 Mar 12, 2021 - 10:46am PLOTTED BY: MSLyons

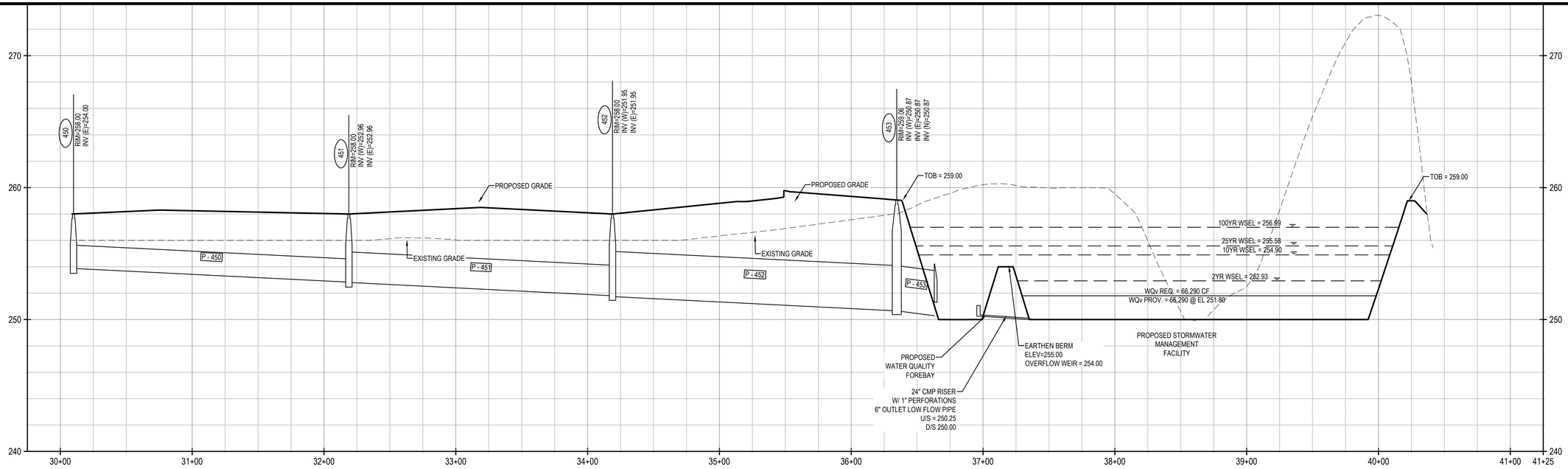

STM 400-S
HORIZONTAL SCALE: 1" = 40'
VERTICAL SCALE: 1" = 4'

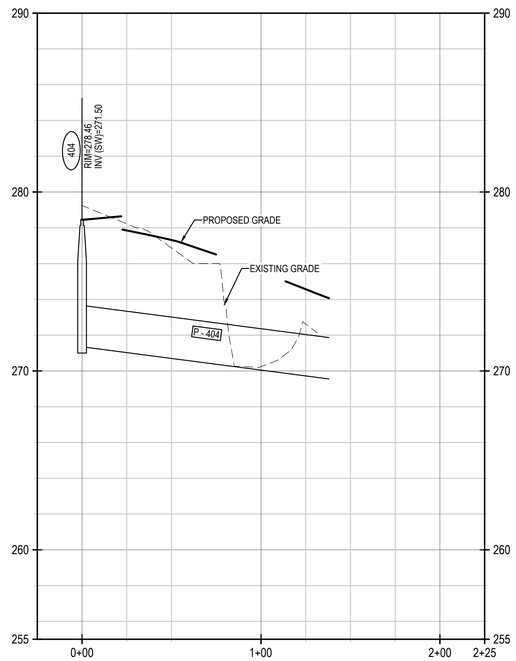

STM 400-NE
HORIZONTAL SCALE: 1" = 40'
VERTICAL SCALE: 1" = 4'

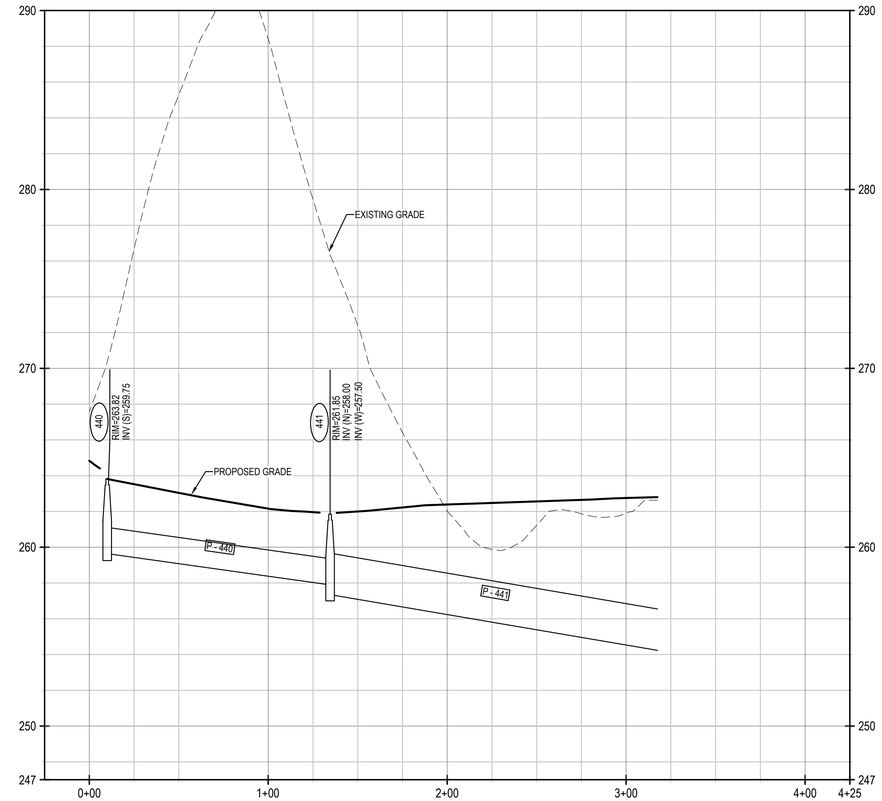

SYSTEM 400-POND
HORIZONTAL SCALE: 1" = 40'
VERTICAL SCALE: 1" = 4'

NOTE:
HGE AS INDICATED ON THE PLAN ARE SHOWN PER THE ROUTED STORMWATER MODEL FOR THE 10 YEAR - 24 HOUR STORMWATER AS INDICATED IN THE STORMWATER MANAGEMENT PLANS DATED 01/21/2021.

JOSHUA R. HOUGH
CIVIL ENGINEER
STATE OF CONNECTICUT
PROFESSIONAL ENGINEER
REG. NO. 23584

HASKELL ARCHITECTS and ENGINEERS, P.C.
CONNECTICUT- Architecture and Engineering # 0000056
HASKELL
The Haskell Company
111 Riverside Avenue
Jacksonville, Florida 32202
Phone # (904) 791-4500

YELLIN TRAILER PARKING LOT

No	DESCRIPTION	DATE
K	CRPI	03/12/21
I	CPI_EVER	02/16/21
G	CPI	01/21/21

We hereby expressly reserve the property rights to this drawing and it is not to be reproduced, copied in any format or manner whatsoever without first obtaining our express written permission and consent.

DRAWN BY:	CHECKED BY:
SBC/MSL	JRH

AE JOB NUMBER
3401365

GRADING AND DRAINAGE PROFILES

1C-242
SHEET NUMBER

XREF: 3401365201_LOGFILE - Phase 1 Yellin [P:\340_FoodBev\3401365 Frito Lay Project Knight\Design-Working\Common\Titleblocks\3401365201_LOGFILE - Phase 1 Yellin.dwg]
XREF: 3401365201CM-92 | _US Model Files\Phase 1 Yellin Lot\3401365201CM-92.dwg]
XREF: 3401365201CM-41 | _US Model Files\Phase 1 Yellin Lot\3401365201CM-41.dwg]
XREF: 3401365201CM-11 | _US Model Files\Phase 1 Yellin Lot\3401365201CM-11.dwg]
XREF: 3401365201CM-42 | _US Model Files\Phase 1 Yellin Lot\3401365201CM-42.dwg]
XREF: 3401365201CM-43 | _US Model Files\Phase 1 Yellin Lot\3401365201CM-43.dwg]
P:\340_FoodBev\3401365 Frito Lay Project Knight\Design-Working\Civil\AutoCAD\06 Sheet Files\PHASE 1 YELLIN LOT\3401365201_1C-241.dwg Layout Name: 1C-242 Mar 12, 2021 - 10:46am PLOTTED BY: MSLyons

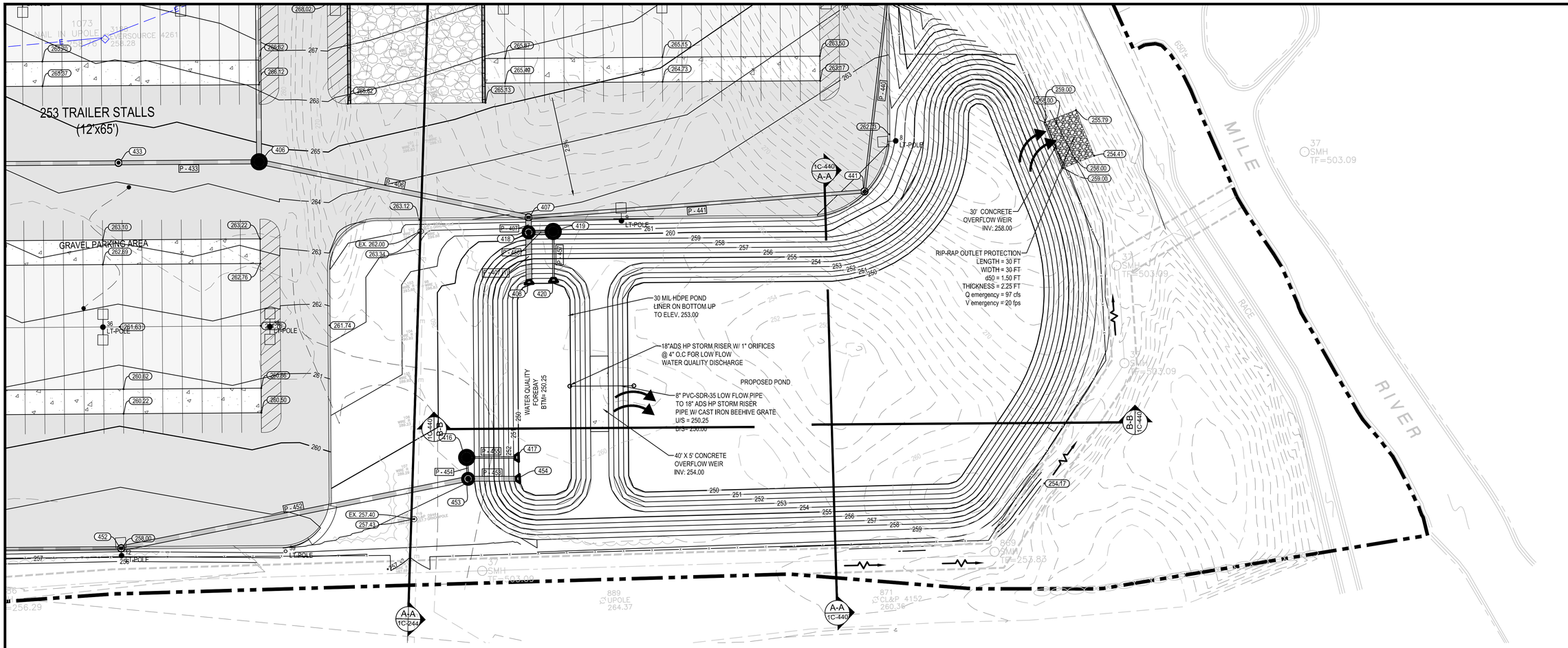

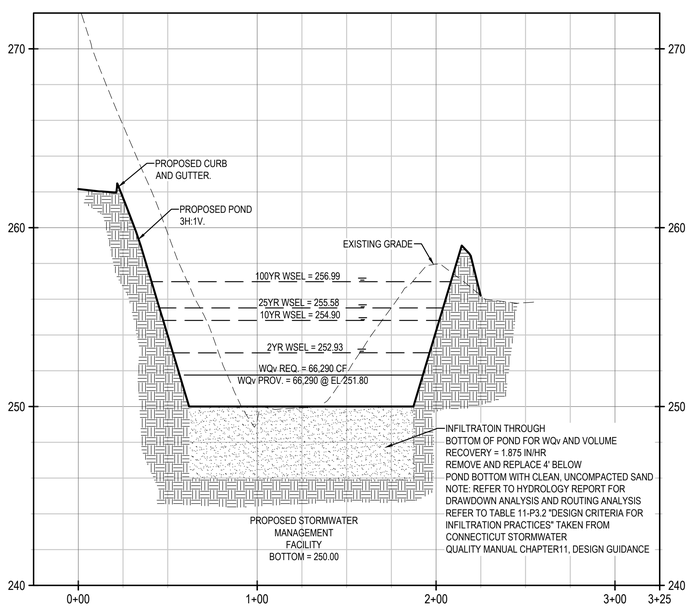

A-A
HORIZONTAL SCALE: 1" = 40'
VERTICAL SCALE: 1" = 4'

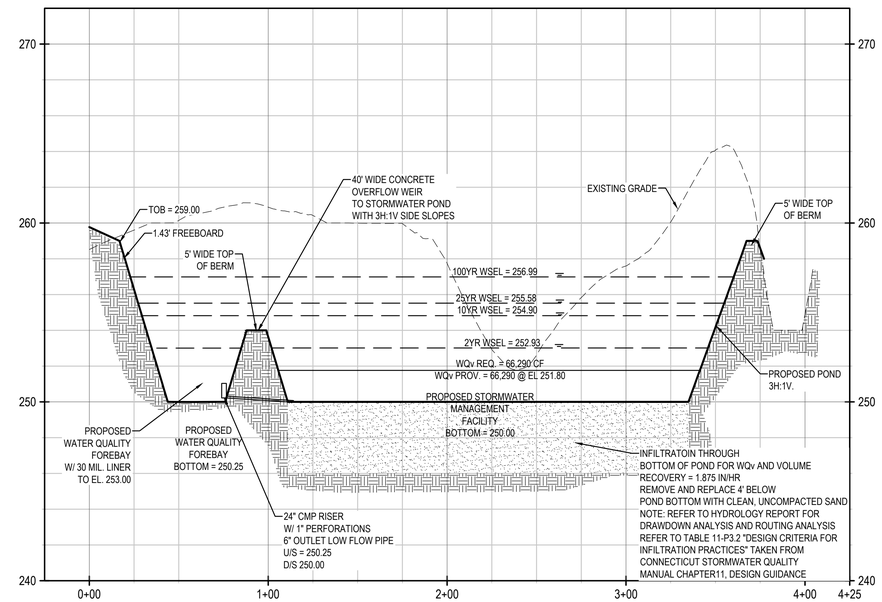

B-B
HORIZONTAL SCALE: 1" = 40'
VERTICAL SCALE: 1" = 4'

N

0 30 60

JOSHUA R. HOUGH
CIVIL ENGINEER
CHIEF COMMERCIAL
STATE OF CONNECTICUT
PROFESSIONAL ENGINEER
21834
REGISTRATION NUMBER
REGISTRATION EXPIRES 12/31/2021

HASKELL ARCHITECTS and ENGINEERS, P.C.
CONNECTICUT- Architecture and Engineering # 0000056

HASKELL

The Haskell Company
111 Riverside Avenue
Jacksonville, Florida 32202
Phone # (904) 791-4500

YELLIN TRAILER PARKING LOT

Frito Lay
Good fun!

No	DESCRIPTION	DATE
K	CRPI	03/12/21
I	CPI_EVER	02/16/21
G	CPI	01/21/21

We hereby expressly reserve the property rights to this drawing and it is not to be reproduced, copied in any format or manner whatsoever without first obtaining our express written permission and consent.

DRAWN BY: SBC/MSL
CHECKED BY: JRH

AE JOB NUMBER
3401365

ENLARGED GRADING AND DRAINAGE PLAN

1C-440
SHEET NUMBER

XREF: 3401365201_LOGFILE - Phase 1 Yellin [P:\340_FoodBev\3401365 Frito Lay Project Knight\Design-Working\Common\Tabloids\3401365201_LOGFILE - Phase 1 Yellin.dwg]
XREF: 3401365201CM-01-YELLEN [..\..\05 Model Files\Phase 1 Yellin Lot\3401365201CM-01-YELLEN.dwg]
XREF: 3401365201CM-21 [..\..\05 Model Files\Phase 1 Yellin Lot\3401365201CM-21.dwg]
XREF: 3401365201CM-42 [..\..\05 Model Files\Phase 1 Yellin Lot\3401365201CM-42.dwg]
XREF: 3401365201CM-43 [..\..\05 Model Files\Phase 1 Yellin Lot\3401365201CM-43.dwg]
XREF: 3401365201CM-41 [..\..\05 Model Files\Phase 1 Yellin Lot\3401365201CM-41.dwg]
XREF: 3401365201CM-92 [..\..\05 Model Files\Phase 1 Yellin Lot\3401365201CM-92.dwg]
P:\340_FoodBev\3401365 Frito Lay Project Knight\Design-Working\CIV\Auto\CAD\06 Sheet Files\PHASE 1 YELLIN LOT\3401365201_1C-440.dwg Layout Name: 1C-440 Mar 12, 2021 - 10:47am PLOTTED BY: MSLyons

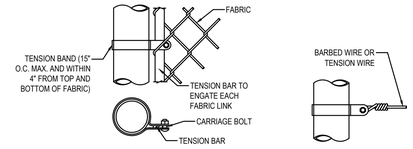

END OR GATE POST DETAIL

TENSION BAND DETAIL

STEEL POST SCHEDULE		
USE AND SECTION	MINIMUM OUTSIDE DIMENSIONS (NOMINAL)	
	FABRIC 72" TO 96"	FABRIC OVER 96"
CORNER, END & PULL POSTS TUBULAR - ROUND	2.875" O.D.	4.00" O.D.
LINE POSTS TUBULAR - ROUND	2.375" O.D.	2.875" O.D.
TOP, BOTTOM & BRACE RAILS TUBULAR - ROUND	1.66" O.D.	

NOTES:

1. DETAILS SHOWN ARE TO CLARIFY REQUIREMENTS AND ARE NOT INTENDED TO LIMIT OTHER TYPES OF FENCE SECTIONS AND METHODS OF INSTALLATION.
2. WIRE TIES, RAILS, POSTS AND BRACES SHALL BE CONSTRUCTED ON THE SECURE SIDE OF THE FENCE ALIGNMENT. CHAIN-LINK FABRIC SHALL BE PLACED ON THE OPPOSITE SIDE OF THE SECURE AREA.
3. UNLESS SPECIFICALLY SHOWN OR SPECIFIED ALL FEB FENCE SHALL HAVE APRON EXTENDED OUTWARD FROM THE AREA BEING PROTECTED.
4. C-SECTION POSTS SHALL BE INSTALLED SO THAT THE VOID INSIDE THE POST IS COMPLETELY FILLED WITH CONCRETE UP TO THE TOP OF THE FOUNDATION.

FENCE LEGEND:

TYPE FE6 - CHAIN-LINE FENCE W/BARBED-WIRE ON SINGLE OUTRIGGER.
TR - FENCE WITH TOP RAIL AND TENSION WIRE AT BOTTOM FINAL NUMBER IS FABRIC WIDTH IN INCHES.

EXAMPLES:

FE6-TR-96 - CHAIN-LINK SECURITY FENCE WITH BARBED-WIREON SINGLE OUTRIGGER, TOP RAIL, AND 96 INCH FABRICWIDTH.

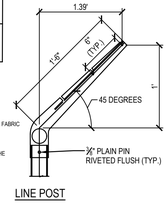

LINE POST

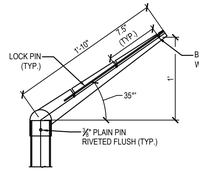

CORNER POST

CHAIN LINK SECURITY FENCE DETAIL
FOR NON-VERTICAL BARBED WIRE SUPPORT POST

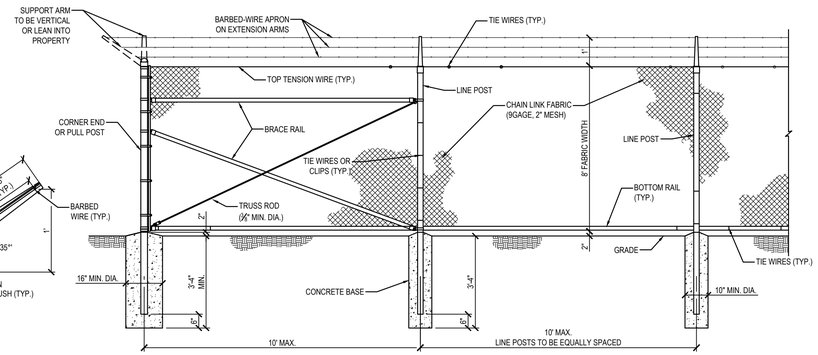

CHAIN LINK SECURITY FENCE DETAIL

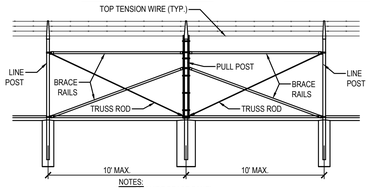

NOTES:
1. PROVIDE BRACE PANEL WHENEVER STRAIGHT RUNS EXCEED 500 FEET.

BRACE PANEL DETAIL

C1 8 FT HIGH FENCING DETAIL

DETAIL | NOT TO SCALE

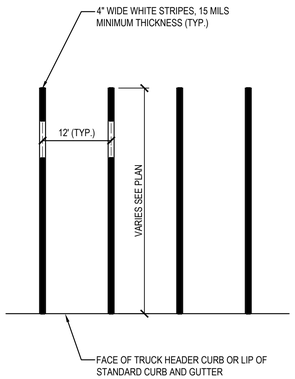

B1 TRAILER PARKING STRIPING DETAIL

DETAIL | NOT TO SCALE

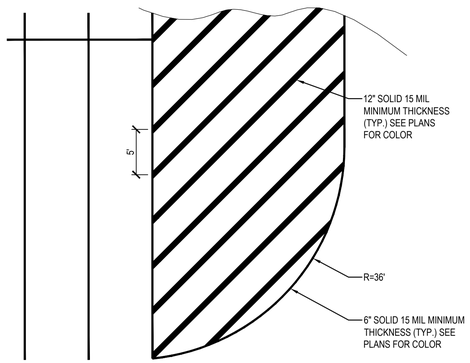

B2 TRUCK PARKING ISLAND GORE STRIPPING

DETAIL | NOT TO SCALE

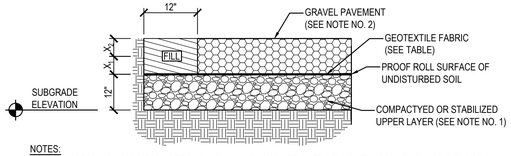

NOTES:
1. COMPACTED OR STABILIZED UPPER LAYER: IN AREAS WHERE SOFT OR OTHERWISE UNSUITABLE SOILS ARE IDENTIFIED DURING PROOF ROLLING, THOSE MATERIALS ARE TO BE UNDERCUT OR STABILIZED. STABILIZATION MAY BE PERFORMED BY SAND BLENDING OR CHEMICAL ADDITION.
2. SEE SUMMARY OF FILL DETAIL FOR COMPACTION AND ACCEPTABLE GRAVEL.
3. BASED ON SUBBASE CONDITIONS, TRAFFIC FREQUENCY AND DESIGN LOADS, SOME PROJECT SITES MAY REQUIRE BOTH SEPARATION AND STABILIZATION GEOTEXTILE FABRIC.

GEOTEXTILE FABRIC (CH, MH ONLY)		
TYPE	DESCRIPTION	BRAND / MODEL
SEPARATION	FABRIC GEOTEXTILE	MIRAFI 180N*

* OR APPROVED EQUIVALENT

AGGREGATE PAVEMENT THICKNESS TABLE				
TYPE	SUBBASE	FABRIC TYPE	1ST LIFT X_1	2ND LIFT X_2
GRAVEL PAVEMENT	12"	SEPARATION	6"	N/A

B3 GRAVEL PAVEMENT DETAIL

DETAIL | NOT TO SCALE

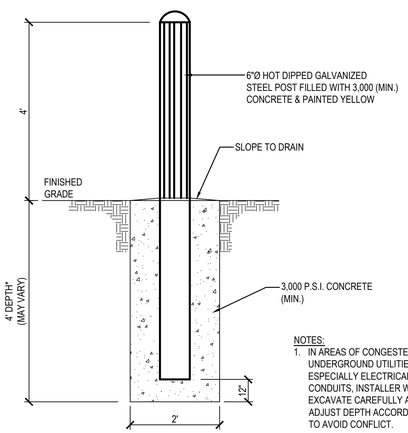

NOTES:
1. IN AREAS OF CONGESTED UNDERGROUND UTILITIES, ESPECIALLY ELECTRICAL CONDUITS, INSTALLER WILL EXCAVATE CAREFULLY AND ADJUST DEPTH ACCORDINGLY TO AVOID CONFLICT.

B4 BOLLARD 6 INCH

DETAIL | NOT TO SCALE

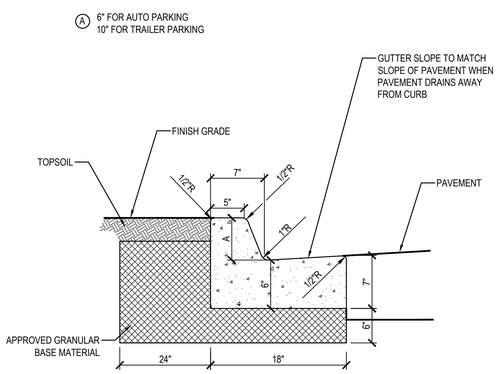

A1 18" CONCRETE CURB & GUTTER

DETAIL | NOT TO SCALE

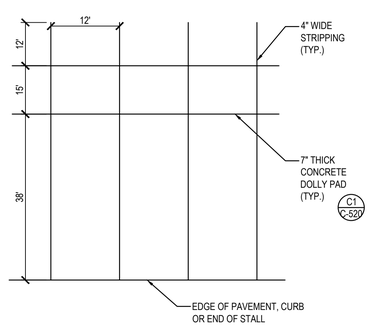

PLAN

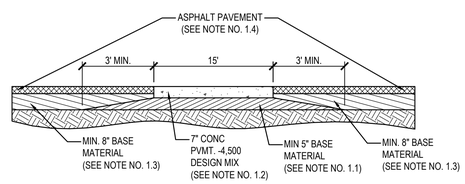

SECTION

NOTES:

1. SUBCONTRACTOR COORDINATION FOR CONCRETE DOLLY PAD INSTALLATION SHALL OCCUR IN SEQUENCE AS FOLLOWS:
   1.1. SITE WORK SUBCONTRACTOR SHALL INSTALL BASE MATERIAL FOR DOLLY PAD.
   1.2. CONCRETE SUBCONTRACTOR SHALL CONSTRUCT DOLLY PAD.
   1.3. SITE WORK SUBCONTRACTOR SHALL INSTALL BASE MATERIAL FOR ASPHALT PAVEMENT ADJACENT TO DOLLY PAD.
   1.4. SITE WORK SUBCONTRACTOR SHALL INSTALL ASPHALT PAVEMENT.
2. FOR ASPHALT PAVEMENT SECTION SEE: A4 C-520

A2 CONRETE DOLLY PAD DETAIL

DETAIL | NOT TO SCALE

BITUMINOUS ASPHALT PAVEMENT MIX DESIGN AND PLACEMENT SHALL BE PER THE LOCAL DEPARTMENT OF TRANSPORTATION AND SUBJECT TO THE HASKELL ASPHALT TESTING PROGRAM.

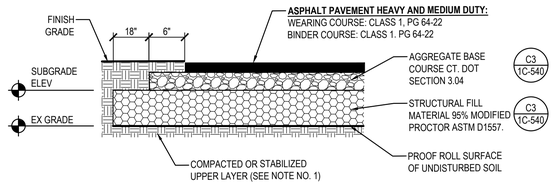

NOTES:
1. COMPACTED OR STABILIZED UPPER LAYER: IN AREAS WHERE SOFT OR OTHERWISE UNSUITABLE SOILS ARE IDENTIFIED DURING PROOF ROLLING, THOSE MATERIALS ARE TO BE UNDERCUT AND REPLACED OR STABILIZED.

PAVEMENT STRUCTURE THICKNESS TABLE				
TYPE	SUBBASE	BASE	BINDER COURSE	WEARING COURSE
MEDIUM-DUTY PAVEMENT	12"	6"	1.5"	1.5"
HEAVY-DUTY PAVEMENT	12"	8"	2.0"	2.0"

A3 ASPHALT PAVEMENT SECTION WITHOUT CURB

DETAIL | NOT TO SCALE

JOSHUA R. HOUGH
CIVIL ENGINEER
CIVIL CONNECTICUT
STATE OF CONNECTICUT
21854
LICENSED PROFESSIONAL ENGINEER
REG. NO. 21854

HASKELL ARCHITECTS and ENGINEERS, P.C.
CONNECTICUT- Architecture and Engineering # 0000056
The Haskell Company
111 Riverside Avenue
Jacksonville, Florida 32202
Phone # (904) 791-4500
HASKELL

YELLIN TRAILER PARKING LOT

Frito Lay Good fun!

No	DESCRIPTION	DATE
K	CRPI	03/12/21
I	CPI_EVER	02/16/21
G	CPI	01/21/21

We hereby expressly reserve the property rights to this drawing and it is not to be reproduced, copied in any format or manner whatsoever without first obtaining our express written permission and consent.

DRAWN BY: SBC/MSL
CHECKED BY: JRH

AE JOB NUMBER 3401365

GEOMETRY DETAILS

1C-520
SHEET NUMBER

XREF: 3401365201_LOGFILE - Phase 1 Yellin [P:\340_FoodBev\3401365 Frito Lay Project Knight\Design-Working\CIVIL\Aub\CAD\06 Sheet Files\PHASE 1 YELLIN LOT\3401365201_1C-520.dwg Layout Name: 1C-520 Mar 12, 2021 - 10:47am PLOTTED BY: MSLyons
P:\340_FoodBev\3401365 Frito Lay Project Knight\Design-Working\CIVIL\Aub\CAD\06 Sheet Files\PHASE 1 YELLIN LOT\3401365201_LOGFILE - Phase 1 Yellin.dwg]

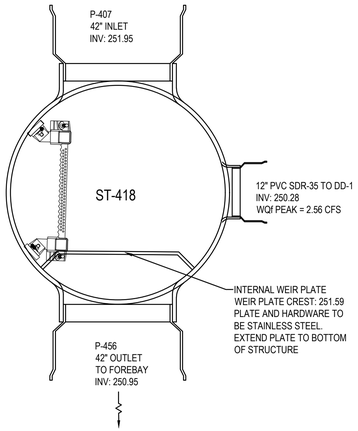

C1 **DIVERSION STRUCTURE ST-418**

DETAIL NOT TO SCALE

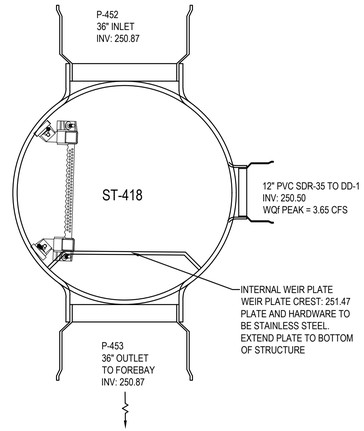

C2 **DIVERSION STRUCTURE ST-453**

DETAIL NOT TO SCALE

LOCATION	MATERIAL DESCRIPTION	LIFT THICKNESS LOOSE	TEST METHOD FOR MAX. DRY DENSITY	COMPACTION	MOISTURE CONTENT (% POINTS)
DENSE GRADED (DGA) AGGREGATE BASE COURSE	Aggregate base meeting the material requirements of Standard Specifications of Connecticut Department of Transportation	Placed according to Section M.05, Connecticut DOT Std. Specifications.	Placed according to Section M.05, Connecticut DOT Std. Specifications.	Placed according to Section M.05, Connecticut DOT Std. Specifications.	Placed according to Section M.05, Connecticut DOT Std. Specifications.
STRUCTURAL FILL: Building areas Pavement areas	On-site transfermaterial USCS Classification: SW, SP, SM, GW, GP, GM, GC or other combinations thereof meeting the following criteria Max Dry Density ≥ 100pcF Plasticity Index (PI) ≤ 25 Liquid Limit (LL) ≤ 50	8 Inches	Modified Proctor (ASTM D 1557)	95 % (Top 12" @ 98 %) (See Note)	+/- 3%
GENERAL FILL: To 12" below pavement base layer Not in building areas	On- site transfer material USCS Classification: SW, SP, SM, GW, GP, GM, GC or other combinations thereof	8 Inches	Modified Proctor (ASTM D 1557)	95 % (Top 12" @ 98 %) (See Note)	+/- 3%
TOP SOIL	USCS Classification: CL, ML, SC, OH or other combinations thereof.	8 Inches	Modified Proctor (ASTM D 1557)	90 % (Top 12" @ 95 %)	+/- 3%

NOTES:
1. TEST FREQUENCY IS IDENTIFIED IN PROJECT SPECIFICATION SECTION 312000 - EARTH MOVING.
2. MATERIAL DESCRIPTIONS APPLY TO ON-SITE AND OFF-SITE MATERIALS.
3. CHANGES TO THE ABOVE CRITERIA CAN ONLY BE MADE WITH APPROVAL OF ENGINEER.
4. FILL DEPTHS IN EXCESS OF 10 FEET SHALL REQUIRE COMPACTION TO NOT LESS THAN 98% MODIFIED PROCTOR TO CONTROL SETTLEMENT OF DEEPER FILL MASSES.

C3 **SUMMARY OF FILL PLACEMENT DETAIL**

DETAIL NOT TO SCALE

LOCATION	MATERIAL DESCRIPTION	MAX. LOOSE LIFT THICKNESS	TEST METHOD FOR MAX. DRY DENSITY	COMPACTION (*)	MOISTURE CONTENT (% POINTS)
PIPE BEDDING & HAUNCHING	Natural or Blended On-site Soil USCS Classification: SW, SP, SM, GW, GP, GM, GC or combinations therefore meeting the following criteria: Max Particle Size = 2 inches Max Plasticity Index = Less than 20 Max Liquid Limit(LL) = 40 Max Organic Content = 3%	8 inches	Modified Proctor (ASTM D 1557)	95%	± 3%
PIPE INITIAL BACKFILL	Natural or Blended On-site Soil USCS Classification: or combinations therefore meeting the following criteria: Max Particle Size = 2 inches Max Plasticity Index = Less than 20 Max Liquid Limit(LL) = 40 Max Organic Content = 3%	8 inches	Modified Proctor (ASTM D 1557)	95% (See Note)	± 3%
PIPE FINAL BACKFILL (ABOVE PIPE TO SUBGRADE) IN NON-PAVEMENT AREAS	Natural or Blended On-site Soil USCS Classification: or combinations therefore meeting the following criteria: Max Particle Size = 2 inches Max Plasticity Index = Less than 20 Max Liquid Limit(LL) = 40 Max Organic Content = 3%	8 inches	Modified Proctor (ASTM D 1557)	95% (See Note)	± 3%
PIPE FINAL BACKFILL (ABOVE PIPE TO SUBGRADE) IN PAVEMENT AREAS	SAME AS ABOVE	8 inches	Modified Proctor (ASTM D 1557)	98% (TOP 12")	± 3%

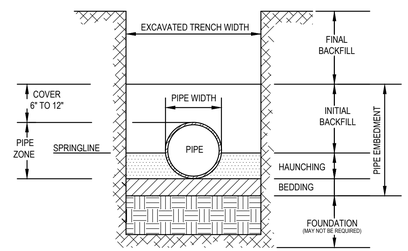

TRENCH CROSS-SECTION

GENERAL NOTES:

1. TESTING FREQUENCY IS IDENTIFIED IN PROJECT SPECIFICATION 312000 - EARTH MOVING, SECTION 3.20.
2. CHANGES TO THE ABOVE CRITERIA CAN ONLY BE MADE WITH APPROVAL OF ENGINEER.
3. FILL DEPTHS IN EXCESS OF 10 FEET SHALL REQUIRE COMPACTION TO NOT LESS THAN 98% MODIFIED PROCTOR TO CONTROL SETTLEMENT OF DEEPER FILL MASSES.

B1 **SUMMARY OF UTILITY / STORM TRENCH & BEDDING DETAIL - (PRIVATE USE ONLY - NOT FOR PUBLIC IMPROVEMENTS)**

DETAIL NOT TO SCALE

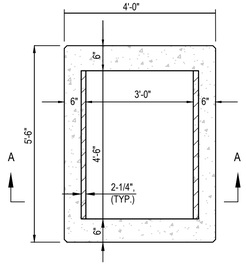

PLAN VIEW

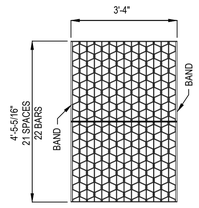

STEEL GRATE

STRAIGHT BARS 2" x 1/4"
RETICULINE BARS 1-1/4" x 3/16"
BANDS 2" x 1/4"
APPROX. WEIGHT 215 LBS.

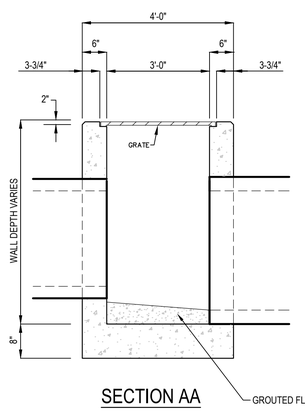

SECTION AA

RECOMMENDED MAXIMUM PIPE SIZE:
3'-0" WALL - 24" PIPE
4'-6" WALL - 36" PIPE

SEE GRADING AND DRAINAGE PLAN FOR ORIENTATION OF CATCH BASIN AND CONSTRUCTION INFORMATION PERTAINING TO PIPE MATERIAL, SIZE, INVERT ELEVATIONS, & GRATE ELEVATIONS.

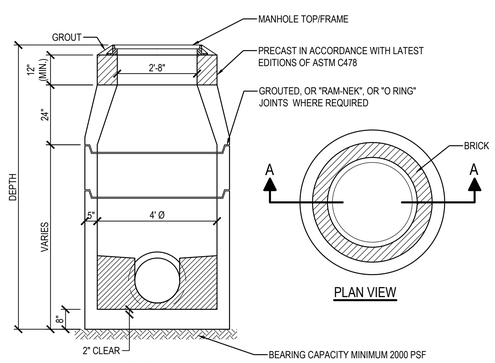

PLAN VIEW

SECTION A-A

NOTES:
1. MAX. SERVICE LINES: 24" RCP THRU 180°, 18" RCP THRU DOWN TO 90°.
2. PIPES MUST NOT BE IN CONSTRUCTION JOINT.
3. PIPES SHALL BE FLUSH WITH INSIDE WALL.
4. CONCRETE DESIGN STRENGTH 4000 PSI.

A1 **STORM MANHOLE DETAIL**

DETAIL NOT TO SCALE

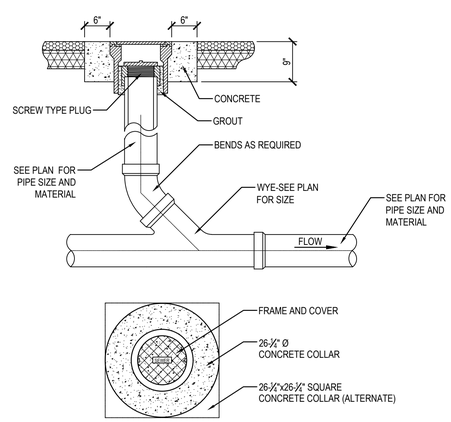

A2 **DRAINAGE CLEANOUT DETAIL**

DETAIL NOT TO SCALE

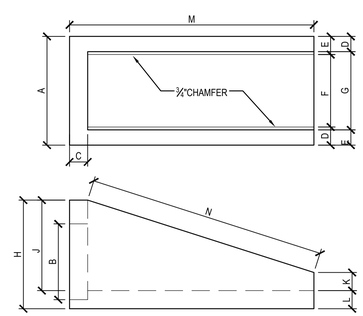

MATERIALS:
CONCRETE: 4,000 P.S.I., TYPE II CEMENT
REINFORCING: PER MANUFACTURING RECOMMENDATION
#6 BARS OVER OPENING (OPTIONAL)
ALL EXPOSED EDGES TO HAVE ¾" CHAMFER

PIPE SIZE	A	B	C	D	E	F	G	H	J	K	L	M	N
15"-18"	2'-7"	2'-1"	6"	6"	6 3/4"	1'-6"	1'-7"	2'-10"	2'-4"	8"	6"	6'-10"	7'-0"
24"	2'-11"	2'-8"	6"	6"	6 3/4"	1'-11"	2'-0"	3'-6"	3'-1"	7'-1/2"	5"	10'-0"	10'-3 1/2"
30"	3'-6"	3'-2"	6"	6"	6 3/4"	2'-5"	2'-6 1/2"	3'-9"	3'-5"	7"	5"	11'-5"	11'-8 1/4"
36"	4'-1"	3'-10"	6"	6"	6 3/4"	2'-9"	3'-0"	4'-6"	4'-0"	6"	6"	14'-0"	14'-4 1/2"

A3 **MITERED END SECTION DETAIL**

DETAIL NOT TO SCALE

A4 **TYPICAL PRE-FABRICATED CATCH BASIN & GRATE**

DETAIL NOT TO SCALE

JOSHUA R. HOUGH
CIVIL ENGINEER
CIVIL CONNECTICUT
STATE OF CONNECTICUT
21864
REGISTERED PROFESSIONAL ENGINEER
REG. NO. 21864

HASKELL ARCHITECTS and ENGINEERS, P.C.
CONNECTICUT- Architecture and Engineering # 0000056
The Haskell Company
111 Riverside Avenue
Jacksonville, Florida 32202
Phone # (904) 791-4500
HASKELL

YELLIN TRAILER PARKING LOT

Frito Lay Good fun!

No	DESCRIPTION	DATE
K	CRPI	03/12/21
I	CPI_EVER	02/16/21
G	CPI	01/21/21

We hereby expressly reserve the property rights to this drawing and it is not to be reproduced, copied in any format or manner whatsoever without first obtaining our express written permission and consent.

DRAWN BY: SBC/MSL
CHECKED BY: JRH

AE JOB NUMBER 3401365

GRADING AND DRAINAGE DETAILS

1C-540
SHEET NUMBER

XREF: 3401365201_LOGFILE- Phase 1 Yellin [P:\340_FoodBev\3401365 Frito Lay Project Knight\Design-Working\Civil\AutoCAD\06 Sheet Files\PHASE 1 YELLIN LOT\3401365201_1C-540.dwg Layout Name: 1C-540 Mar 12, 2021 - 10:47am PLOTTED BY: MSLyons
P:\340_FoodBev\3401365 Frito Lay Project Knight\Design-Working\Civil\AutoCAD\06 Sheet Files\PHASE 1 YELLIN LOT\3401365201_LOGFILE- Phase 1 Yellin.dwg]

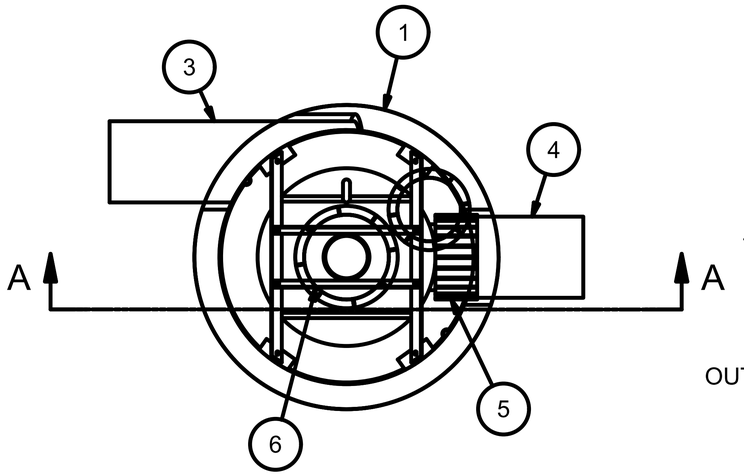

HYDRO FRAME AND COVER (INCLUDED)

GRADE RINGS BY OTHERS
AS REQUIRED

OUTLET STUB ID: 18" (450 mm)
OUTLET STUB OD: 18.7" (475 mm)

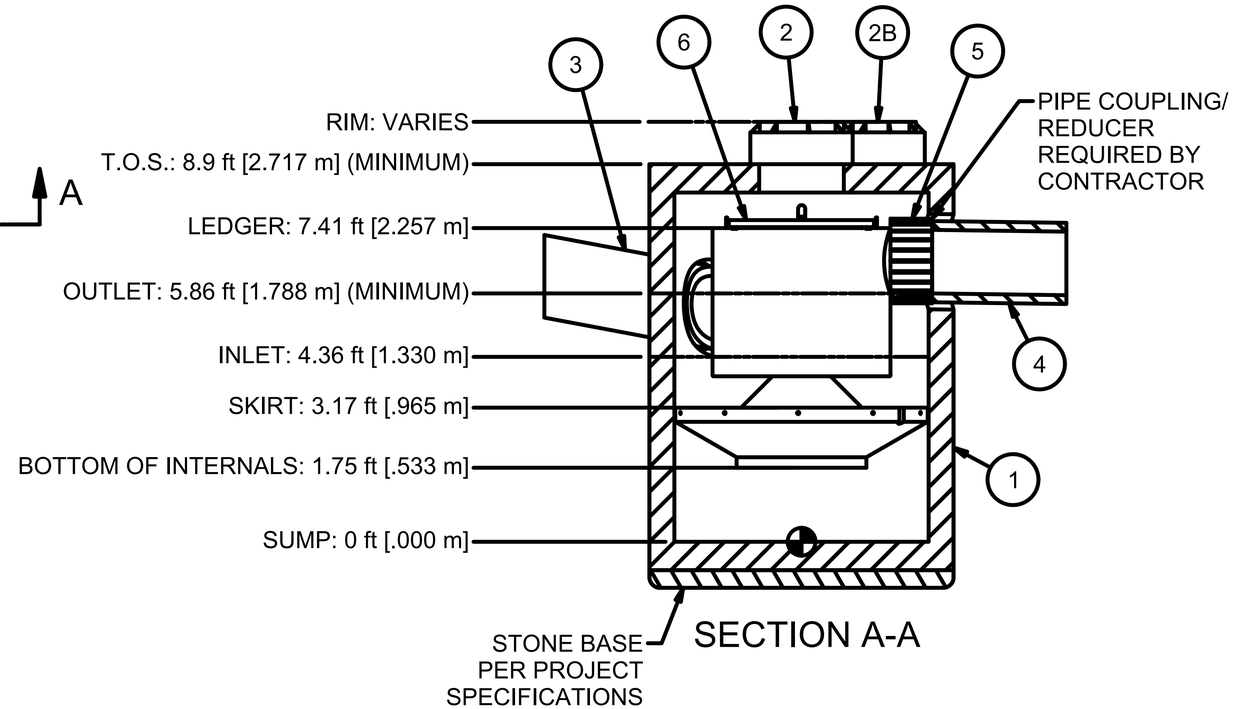

SECTION A-A

NOTE: NOT FOR CONSTRUCTION.
CONTACT HYDRO FOR SITE
SPECIFIC DETAIL

EQUIPMENT PERFORMANCE

The stormwater treatment unit shall adhere to the hydraulic parameters given in the chart below and provide the removal efficiencies and storage capacities as follows:

1. The treatment system shall use an induced vortex to separate pollutants from stormwater runoff.
2. Peak Hydraulic Capacity: 8.0 cfs (227 l/s)
3. Sediment Storage Capacity: 2.10 cu. yd. (1.59 cu. m)
4. Continuous Oil Storage Capacity: 216 gal. (818 liters)
5. Sediment shall be stored in a zone that is isolated from the main flow path and protected from reintrainment by a benching skirt.
6. For more product information including regulatory acceptances, please visit https://hydro-int.com/en/products/downstream-defender

PARTS LIST

ITEM	QTY	SIZE (in)	SIZE (mm)	DESCRIPTION
1	1	72	1800	PRECAST MANHOLE (BY HYDRO VIA PRECASTER)
2	3	24	600	FRAME AND COVER
2B	1	18	450	FRAME AND COVER
3	1	18 (MAX)	450 (MAX)	MAX INLET PIPE (BY OTHERS)
4	1	18 (MAX)	450 (MAX)	MAX OUTLET PIPE (BY OTHERS)
5	1			PIPE COUPLING (BY OTHERS)
6	1			INTERNAL COMPONENTS (PRE-INSTALLED)

ANY WARRANTY GIVEN BY HYDRO INTERNATIONAL WILL APPLY ONLY TO THOSE ITEMS SUPPLIED BY IT. ACCORDINGLY HYDRO INTERNATIONAL CANNOT ACCEPT ANY RESPONSIBILITY FOR ANY STRUCTURE, PLANT, OR EQUIPMENT, (OR THE PERFORMANCE THERE OF) DESIGNED, BUILT, MANUFACTURED, OR SUPPLIED BY ANY THIRD PARTY. HYDRO INTERNATIONAL HAVE A POLICY OF CONTINUOUS DEVELOPMENT AND RESERVE THE RIGHT TO AMEND THE SPECIFICATION. HYDRO INTERNATIONAL CANNOT ACCEPT LIABILITY FOR PERFORMANCE OF ITS EQUIPMENT, (OR ANY PART THEREOF), IF THE EQUIPMENT IS SUBJECT TO CONDITIONS OUTSIDE ANY DESIGN SPECIFICATION. HYDRO INTERNATIONAL OWNS THE COPYRIGHT OF THIS DRAWING, WHICH IS SUPPLIED IN CONFIDENCE. IT MUST NOT BE USED FOR ANY PURPOSE OTHER THAN THAT FOR WHICH IT IS SUPPLIED AND MUST NOT BE REPRODUCED, IN WHOLE OR IN PART, WITHOUT PRIOR PERMISSION IN WRITING FROM HYDRO INTERNATIONAL.

PROJECTION

IF IN DOUBT ASK

COMMENTS:

1. MANHOLE WALL AND SLAB THICKNESSES ARE NOT TO SCALE.
2. CONTACT HYDRO INTERNATIONAL FOR A BOTTOM OF STRUCTURE ELEVATION PRIOR TO SETTING DOWNSTREAM DEFENDER MANHOLE.

DATE: 11/8/19	SCALE: NTS	
DRAWN BY: GW	CHECKED BY:	APPROVED BY

Title
8ft DIAMETER

DOWNSTREAM DEFENDEER

GENERAL ARRANGEMENT

Hydro International
hydro-int.com
<COMPANY>

DO NOT SCALE DRAWING
STEEL FABRICATION TOLERANCES
UNLESS OTHERWISE SPECIFIED,
DIMENSIONS ARE IN INCHES.

LINEAR
000 - 012in = ±0.04in
012 - 024in = ±0.06in
024 - 048in = ±0.08in
048 - 120in = ±0.12in
120in >>>> = ±0.20in

ANGULAR
000 - 120in = ±1°
120 - 240in = ±0.5°
240in >>>> = ±0.25°

WEIGHT: | MATERIAL:

STOCK NUMBER:

DRAWING NO.: DD GA

SHEET SIZE: | SHEET: | Rev: -

JOSHUA R. HOUGH
CIVIL ENGINEER
LICENSE NUMBER 21864
STATE OF CONNECTICUT
PROFESSIONAL ENGINEER
REG. NO. 21864

HASKELL ARCHITECTS and ENGINEERS, P.C.
CONNECTICUT- Architecture and Engineering # 0000056
The Haskell Company
111 Riverside Avenue
Jacksonville, Florida 32202
Phone # (904) 791-4500
HASKELL

YELLIN TRAILER PARKING LOT

Frito Lay Good fun!

No	DESCRIPTION	DATE
K	CRPI	03/12/21
I	CPI_EVER	02/16/21
G	CPI	01/21/21

We hereby expressly reserve the property rights to this drawing and it is not to be reproduced, copied in any format or manner whatsoever without first obtaining our express written permission and consent.

DRAWN BY: SBC/MSL	CHECKED BY: JRH

AE JOB NUMBER
3401365

GRADING AND DRAINAGE DETAILS

1C-541
SHEET NUMBER

XREF: 3401365201_LOGFILE- Phase 1 Yellin [P:\340_FoodBev\3401365 Frito Lay Project Knight\Design-Working\Common\Tabelooks\3401365201_LOGFILE- Phase 1 Yellin.dwg]
P:\340_FoodBev\3401365 Frito Lay Project Knight\Design-Working\CIVIL\AutoCAD\06 Sheet Files\PHASE 1 YELLIN LOT\3401365201_1C-540.dwg Layout Name: 1C-541 Mar 12, 2021 - 10:47am PLOTTED BY: MSLyons

C1 X
DETAIL | NOT TO SCALE

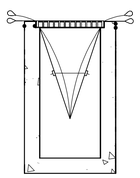

INSTALLATION DETAIL

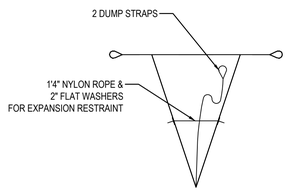

BAG DETAIL

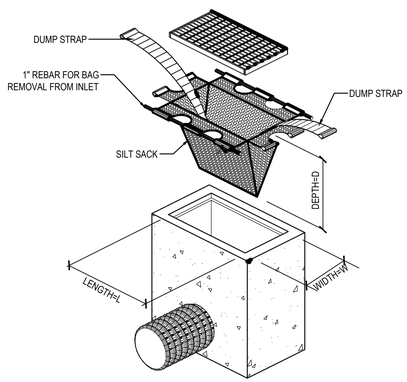

REGULAR FLOW SILTSACK

PROPERTIES	TEST METHOD	UNITS
GRAB TENSILE STRENGTH	ASTM D-4632	300 LBS
GRAB TENSILE ELONGATION	ASTM D-4632	20 %
PUNCTURE	ASTM D-4833	120 LBS
MULLEN BURST	ASTM D-3786	800 PSI
TRAPEZOID TEAR	ASTM D-4533	120 LBS
UV RESISTANCE	ASTM D-4355	80 %
APPARENT OPENING SIZE	ASTM D-4751	40 US SIEVE
FLOW RATE	ASTM D-4491	40 GAL/MIN/SQ FT
PERMITTIVITY	ASTM D-4491	0.55 SEC -1

MAINTENANCE:
REMOVE ALL ACCUMULATED SEDIMENT AND DEBRIS FRIOM VICINITY OF UNIT AFTER EACH STORM EVENT. IF THE CONTAINMENT AREA IS MORE THAN ONE-THIRD FULL OF SEDIMENT, THEN EMPTY THE SILTSACK BY LIFTING THE UNIT OUT OF THE INLET USING THE LIFTING STRAPS AND REMOVING THE GRATE.

NOTE: AS MANUFACTURED PER SILTSACK MFG. OR APPROVED EQUAL.

A1 INLET PROTECTION SILT SACK
DETAIL | NOT TO SCALE

C2 X
DETAIL | NOT TO SCALE

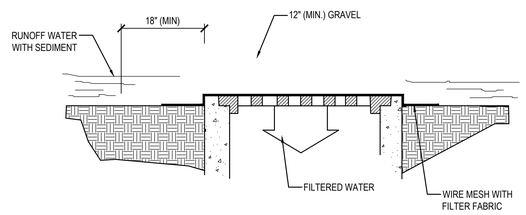

GRAVEL AND WIRE MESH DROP INLET SEDIMENT FILTER

SPECIFIC APPLICATION
THIS METHOD OF APPLICATION IS APPLICABLE WHERE HEAVY CONCENTRATED FLOWS ARE EXPECTED, BUT NOT WHERE PONDING AROUND THE STRUCTURE MIGHT CAUSE EXCESSIVE INCONVIENCE OR DAMAGE TO ADJACENT STRUCTURES AND UNPROTECTED AREAS.

B2 GRAVEL INLET PROTECTION
DETAIL | NOT TO SCALE

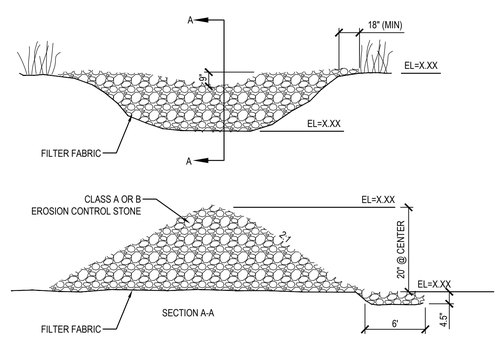

A2 CHECK DAM
DETAIL | NOT TO SCALE

C3 X
DETAIL | NOT TO SCALE

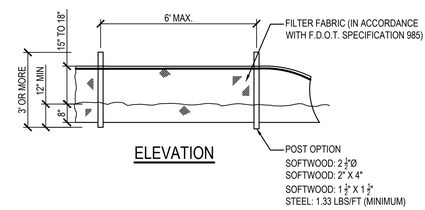

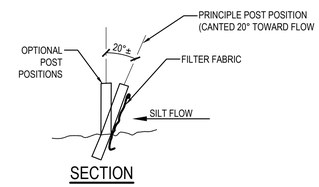

B3 TYPE III SILT FENCE
DETAIL | NOT TO SCALE

C4 X
DETAIL | NOT TO SCALE

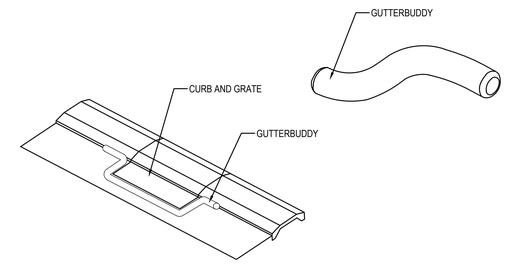

1. GUTTERBUDDY OR APPROVED EQUAL SHALL BE A SYNTHETIC FILTER MANUFACTURED FROM RECYCLED SYNTHETIC FIBERS.
2. MANUFACTURED TO BE 9" IN DIAMETER AND A MINIMUM OF TWENTY-FOUR (24) INCHES LONGER THAN THE CURB INLET OPENING. THIS WILL ALLOW FOR SUFFICIENT LENGTH TO COVER THE INLET WITH TWELVE (12) INCHES BEYOND THE INLET ON BOTH ENDS.
3. INSTALL IN FRONT OF THE CURB INLET OPENING. EACH END SHOULD OVERLAP THE CURB INLET APPROXIMATELY 12".
4. SHOULD BE CLEANED IF A VISUAL INSPECTION SHOWS SILT AND DEBRIS BUILD UP.
5. TO REMOVE LIFT OUT OF THE OPENING.
6. PONDING IS LIKELY IF SEDIMENT IS NOT REMOVED REGULARLY. INSPECTION SHOULD BE ON A REGULAR BASIS AND IMMEDIATELY AFTER MAJOR RAIN EVENTS.

B4 GUTTER BUDDY
DETAIL | NOT TO SCALE

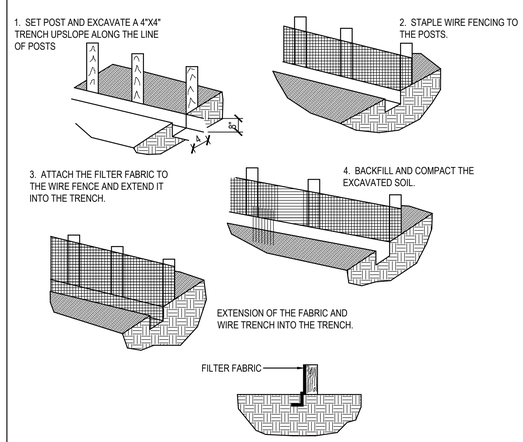

A4 SILTFENCE CONSTRUCTION DETAIL
DETAIL | NOT TO SCALE

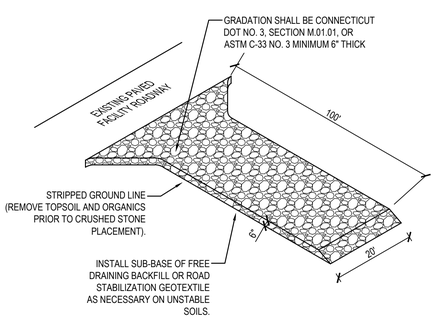

REFERENCE 2002 CONNECTICUT GUIDELINES FOR SOIL EROSION AND SEDIMENT CONTROL, FIGURE CE-2. DIAGRAM FOR TYPICAL CONSTRUCTION ENTRANCE.

A3 CONSTRUCTION ENTRANCE
DETAIL | NOT TO SCALE

JOSHUA R. HOUGH
CIVIL ENGINEER
STATE OF CONNECTICUT
PROFESSIONAL ENGINEER
21864
REG. NO. 21864

HASKELL ARCHITECTS and ENGINEERS, P.C.
CONNECTICUT- Architecture and Engineering # 0000056
HASKELL
The Haskell Company
111 Riverside Avenue
Jacksonville, Florida 32202
Phone # (904) 791-4500

YELLIN TRAILER PARKING LOT

Frito Lay Good fun!

No	DESCRIPTION	DATE
K	CRPI	03/12/21
I	CPI_EVER	02/16/21
G	CPI	01/21/21

We hereby expressly reserve the property rights to this drawing and it is not to be reproduced, copied in any format or manner whatsoever without first obtaining our express written permission and consent.

DRAWN BY: SBC/MSL
CHECKED BY: JRH

AE JOB NUMBER
3401365

EROSION AND SEDIMENT CONTROL DETAILS

1C-560
SHEET NUMBER

XREF: 3401365201_LOGFILE- Phase 1 Yellin [P:\340_FoodBev\3401365 Frito Lay Project Knight\Design-Working\Common\Tiledcloks\3401365201_1C-560.dwg Layout Name: 1C-560 Mar 12, 2021 - 10:47am PLOTTED BY: MSLyons]
P:\340_FoodBev\3401365 Frito Lay Project Knight\Design-Working\Civil\Auto\CAD\06 Sheet Files\PHASE 1 YELLIN LOT\3401365201_1C-560.dwg Layout Name: 1C-560 Mar 12, 2021 - 10:47am PLOTTED BY: MSLyons