Design for Code Acceptance

6

Prescriptive Residential Wood Deck Construction Guide

Based on the *2009 International Residential Code*

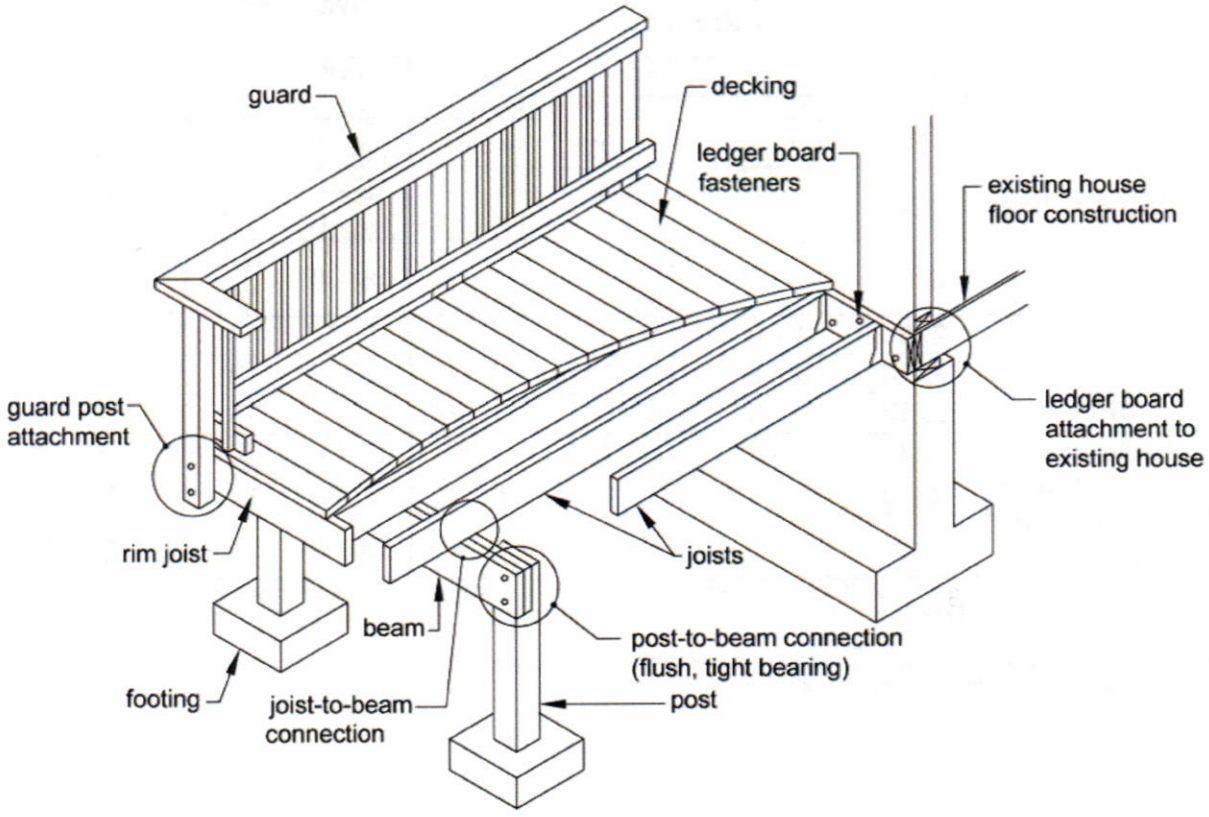

Where applicable, provisions and details contained in this document are based on the *International Residential Code (IRC)* [bracketed text references applicable sections of the *IRC*]. Prescriptive construction methods recommended meet or exceed minimum requirements of the *IRC*. Provisions that are not found in the *IRC* are recommended as good industry practice. Where differences exist between provisions of this document and the *IRC*, provisions of the *IRC* shall apply. This document is not intended to preclude the use of other construction methods or materials. All construction and materials must be approved by the authority having jurisdiction. Every effort has been made to reflect the language and intent of the *IRC*. However, no assurance can be given that designs and construction made in accordance with this document meet the requirements of any particular jurisdiction.

Copyright © 2013 American Wood Council

AMERICAN WOOD COUNCIL

May 2013

ADDENDUM

to the *2009 IRC* version of *Design for Code Acceptance No. 6 (DCA 6)* *Prescriptive Residential Wood Deck Construction Guide*

Effective June 1, 2013, design values for all grades and sizes of visually-graded Southern Pine and Mixed Southern Pine lumber, 2"- 4" thick will change. New tables and other criteria to use with DCA 6-09 are shown below (spans and other criteria that will change on June 1, 2013 are shown as underlined).

Table 2. Maximum Joist Spans (L_J)

		Joist Spacing (o.c.)					
		Without Overhangs[1]			With Overhangs up to $L_J/4$[2]		
Species	**Size**	**12"**	**16"**	**24"**	**12"**	**16"**	**24"**
Southern Pine	2x8	~~13' - 8"~~ 13' - 1"	~~12' - 5"~~ 11' - 10"	~~10' - 2"~~ 9' - 8"	~~10' - 9"~~ 10' - 1"	~~10' - 9"~~ 10' - 1"	~~10' - 2"~~ 9' - 8"
	2x10	~~17' - 5"~~ 16' - 2"	~~15' - 10"~~ 14' - 0"	~~13' - 1"~~ 11' - 5"	~~15' - 6"~~ 14' - 6"	~~15' - 6"~~ 14' - 0"	~~13' - 1"~~ 11' - 5"
	2x12	18' - 0"	~~18' - 0"~~ 16' - 6"	~~15' - 5"~~ 13' - 6"	18' - 0"	~~18' - 0"~~ 16' - 6"	~~15' - 5"~~ 13' - 6"
Douglas Fir-Larch, Hem-Fir, SPF[3]	2x8	12' - 6"	11' - 1"	9' - 1"	9' - 5"	9' - 5"	9' - 1"
	2x10	15' - 8"	13' - 7"	11' - 1"	13' - 7"	13' - 7"	11' - 1"
	2x12	18' - 0"	15' - 9"	12' - 10"	18' - 0"	15' - 9"	12' -10"
Redwood, Western Cedars, Ponderosa Pine[4], Red Pine[4]	2x8	11' - 8"	10' - 7"	8' - 8"	8' - 6"	8' - 6"	8' - 6"
	2x10	14' - 11"	13' - 0"	10' - 7"	12' - 3"	12' - 3"	10' - 7"
	2x12	17' - 5"	15' - 1"	12' - 4"	16' - 5"	15' - 1"	12' - 4"

1. Assumes 40 psf live load, 10 psf dead load, L/360 deflection, No. 2 grade, and wet service conditions. See Figure 1B.
2. Assumes 40 psf live load, 10 psf dead load, L/180 cantilever deflection with 220 lb point load, No. 2 grade, and wet service conditions. See Figure 1A and Figure 2.
3. Incising assumed for refractory species including Douglas fir-larch, hem-fir, and spruce-pine-fir.
4. Design values based on northern species with no incising assumed.

Table 3. Deck Beam Spans (L_B)[1] for Joists Framing from One Side Only

Species	Size[4]	Joist Spans (L_J) Less Than or Equal to: 6'	8'	10'	12'	14'	16'	18'
Southern Pine	2-2x6	~~7' - 1"~~ 6' - 11"	~~6' - 2"~~ 5' - 11"	~~5' - 6"~~ 5' - 4"	~~5' - 0"~~ 4' - 10"	~~4' - 8"~~ 4' - 6"	~~4' - 4"~~ 4' - 3"	~~4' - 1"~~ 4' - 0"
	2-2x8	~~9' - 2"~~ 8' - 9"	~~7' - 11"~~ 7' - 7"	~~7' - 1"~~ 6' - 9"	~~6' - 6"~~ 6' - 2"	~~6' - 0"~~ 5' - 9"	~~5' - 7"~~ 5' - 4"	~~5' - 3"~~ 5' - 0"
	2-2x10	~~11' - 10"~~ 10' - 4"	~~10' - 3"~~ 9' - 0"	~~9' - 2"~~ 8' - 0"	~~8' - 5"~~ 7' - 4"	~~7' - 9"~~ 6' - 9"	~~7' - 3"~~ 6' - 4"	~~6' - 10"~~ 6' - 0"
	2-2x12	~~13' - 11"~~ 12' - 2"	~~12' - 0"~~ 10' - 7"	~~10' - 9"~~ 9' - 5"	~~9' - 10"~~ 8' - 7"	~~9' - 1"~~ 8' - 0"	~~8' - 6"~~ 7' - 6"	~~8' - 0"~~ 7' - 0"
	3-2x6	~~8' - 7"~~ 8' - 2"	~~7' - 8"~~ 7' - 5"	~~6' - 11"~~ 6' - 8"	~~6' - 3"~~ 6' - 1"	~~5' - 10"~~ 5' - 8"	~~5' - 5"~~ 5' - 3"	~~5' - 2"~~ 5' - 0"
	3-2x8	~~11' - 4"~~ 10' - 10"	~~9' - 11"~~ 9' - 6"	~~8' - 11"~~ 8' - 6"	~~8' - 1"~~ 7' - 9"	~~7' - 6"~~ 7' - 2"	~~7' - 0"~~ 6' - 8"	~~6' - 7"~~ 6' - 4"
	3-2x10	~~14' - 5"~~ 13' - 0"	~~12' - 10"~~ 11' - 3"	~~11' - 6"~~ 10' - 0"	~~10' - 6"~~ 9' - 2"	~~9' - 9"~~ 8' - 6"	~~9' - 1"~~ 7' - 11"	~~8' - 7"~~ 7' - 6"
	3-2x12	~~17' - 5"~~ 15' - 3"	~~15' - 1"~~ 13' - 3"	~~13' - 6"~~ 11' - 10"	~~12' - 4"~~ 10' - 9"	~~11' - 5"~~ 10' - 0"	~~10' - 8"~~ 9' - 4"	~~10' - 1"~~ 8' - 10"
Douglas Fir-Larch[2], Hem-Fir[2], SPF[2], Redwood, Western Cedars, Ponderosa Pine[3], Red Pine[3]	3x6 or 2-2x6	5' - 5"	4' - 8"	4' - 2"	3' - 10"	3' - 6"	3' - 1"	2' - 9"
	3x8 or 2-2x8	6' - 10"	5' - 11"	5' - 4"	4' - 10"	4' - 6"	4' - 1"	3' - 8"
	3x10 or 2-2x10	8' - 4"	7' - 3"	6' - 6"	5' - 11"	5' - 6"	5' - 1"	4' - 8"
	3x12 or 2-2x12	9' - 8"	8' - 5"	7' - 6"	6' - 10"	6' - 4"	5' - 11"	5' - 7"
	4x6	6' - 5"	5' - 6"	4' - 11"	4' - 6"	4' - 2"	3' - 11"	3' - 8"
	4x8	8' - 5"	7' - 3"	6' - 6"	5' - 11"	5' - 6"	5' - 2"	4' - 10"
	4x10	9' - 11"	8' - 7"	7' - 8"	7' - 0"	6' - 6"	6' - 1"	5' - 8"
	4x12	11' - 5"	9' - 11"	8' - 10"	8' - 1"	7' - 6"	7' - 0"	6' - 7"
	3-2x6	7' - 4"	6' - 8"	6' - 0"	5' - 6"	5' - 1"	4' - 9"	4' - 6"
	3-2x8	9' - 8"	8' - 6"	7' - 7"	6' - 11"	6' - 5"	6' - 0"	5' - 8"
	3-2x10	12' - 0"	10' - 5"	9' - 4"	8' - 6"	7' - 10"	7' - 4"	6' - 11"
	3-2x12	13' - 11"	12' - 1"	10' - 9"	9' - 10"	9' - 1"	8' - 6"	8' - 1"

Table 3A: Joist Hanger Download Capacity

Joist Size	Minimum Capacity, lbs
2x8	~~600~~ 500
2x10	~~700~~ 600
2x12	~~800~~ 700

Figure 28: Stair Stringer Requirements

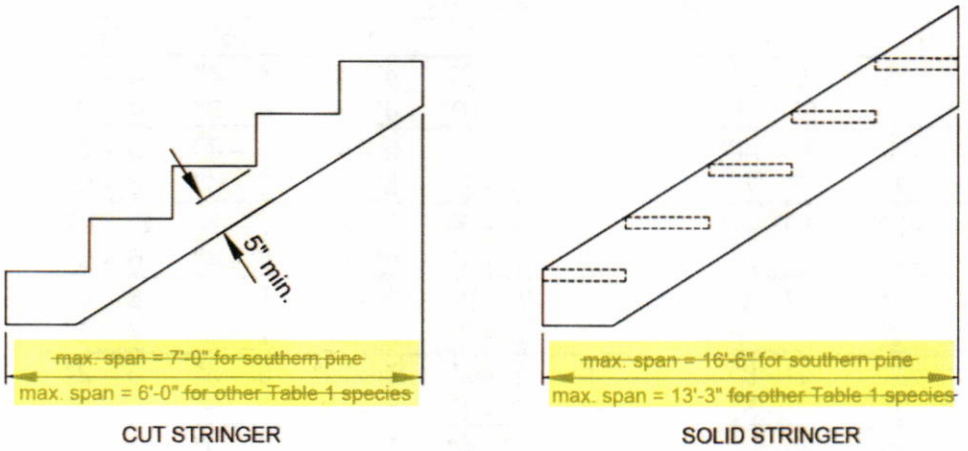

Table 6: Minimum Tread Size for Cut and Solid Stringers[1]

Species	Cut Stringer	Solid Stringer
Southern Pine	2x4 or 5/4	~~2x6~~ 2x8
Douglas Fir Larch, Hem-Fir, SPF[2]	2x4 or 5/4	2x8 or 3x4
Redwood, Western Cedars, Ponderosa Pine[3], Red Pine[3]	2x4 or 5/4	2x10 or 3x4

1. Assumes 300 lb concentrated load, L/288 deflection limit, No. 2 grade, and wet service conditions.
2. Incising assumed for refractory species including Douglas fir-larch, hem-fir, and spruce-pine-fir.
3. Design values based on northern species with no incising assumed.

Commentary page C5

JOIST HANGERS

The loads listed in the Table 3A are derived from the worst case condition for each joist size based on Table 2 (~~508 lbs, 654 lbs, and 771 lbs~~ 483 lbs, 570 lbs, and 675 lbs for southern pine at 24" o.c. for 2x8, 2x10, and 2x12, respectively). For simple span applications without overhangs, as shown in Table 2, note that spans are identical to those shown in Table 2 with overhangs for southern pine joists at 24" o.c., therefore the same joist hanger capacities as shown in Table 3A will work for spans with or without overhangs.

Commentary page C6

POST REQUIREMENTS

Assuming that identical species will be used for joists and beams, an analysis of Table 3 reveals that a maximum tributary area of approximately ~~81~~ 71 ft^2 will result if southern pine is used (see calculations under FOOTINGS for L_J = 18'-0" and L_B = ~~8'-0"~~ 7'-0" for 2-2x12). This results in a load on the post of ~~4,061~~ 3,562 lbs. A 4x4 southern pine No. 2 post 10' in height would work in this situation (assuming pinned end fixity). Similarly, for other Table 3 species, assuming joists and beams are the same species, a maximum

post load of 3,717 lbs is calculated. A 4x4 No. 2 post 8' in height will work in this case (western cedar controls). If different species are used for joists than are used for beams, an analysis is required to determine the maximum tributary area on the post.

Commentary page C10

STAIR REQUIREMENTS

Additionally, *IRC* Table R301.5 footnote (c) requires a 300 lb concentrated load check on stair treads. Analysis revealed that 2x6 No. 2 ~~southern pine works~~ treads do not work for a 34.5" span (36" – ¾" bearing at each end) when the 300 lbs is distributed across 2 inches (e.g. 150 pli). This is based on L/288 deflection criteria (ICC ES Acceptance Criteria 174 requires $^1/_8$" deflection limit: 36"/0.125" = 288). ~~Other species will not calculate for that span using 2x6.~~

STAIR FOOTING REQUIREMENTS

Stair stringers should be supported by bearing at the end where the stairway meets grade. The detail shown assumes a 40 psf live load and 10 psf dead load over a tributary area of 18" and one-half of the maximum span permitted for solid stringers (~~16'-6" for southern pine and~~ 13'-3" for ~~other~~ all species). This calculates to ~~625 lbs and~~ 500 lbs ~~respectively~~. ~~For southern pine, seven #8 wood screws would be required.~~ Northern species would require eight #8 wood screws (16d box or common nails would be comparable).

Commentary page C11

Table C7a. Maximum Distance "a" from Trimmer Joist End to a Point where a 6' Header Frames into a 2-ply Trimmer Joist.

Species	Trimmer Size	a_{max}
Southern Pine	2-2x8	~~18"~~ 17"
	2-2x10	~~24"~~ 19"
	2-2x12	~~29"~~ 22"
Douglas Fir-Larch, Hem-Fir, SPF[1]	2-2x8	14"
	2-2x10	16"
	2-2x12	19"
Redwood, Western Cedars, Ponderosa Pine[2], Red Pine[2]	2-2x8	14"
	2-2x10	16"
	2-2x12	18"

1. Incising assumed for refractory species including Douglas fir-larch, hem-fir, and spruce-pine-fir.
2. Design values based on northern species with no incising assumed.

Commentary page C12

3) Assume a 2x12 southern pine joist spanning 18'-0" at 16" o.c. (per Table 2) framing around a 5' wide by 1.5' deep bay window. Set a 6' header ~~2'~~ 20" from the end of the trimmer joist. A double trimmer joist is permitted since a = ~~24"~~ 20" which is less than a_{max} = ~~29"~~ 22" in Table C7a. However, if the trimmer hanger does not attach through the ledger to the rim board or band joist, the trimmer joist span is limited to 11'-2" per Table C7b. Several solutions exist:

- Reduce all joist spans to 11'-2".
- Place a post under the center of the header to reduce the header span.

CONTENTS

MINIMUM REQUIREMENTS....2
DECKING REQUIREMENTS....3
JOIST SIZE....3
BEAM SIZE & ASSEMBLY REQUIREMENTS....5
DECK FRAMING PLAN....6
JOIST-TO-BEAM CONNECTION....7
JOIST HANGERS....7
POST REQUIREMENTS....7
RIM JOIST REQUIREMENTS....8
FOOTINGS....9
LEDGER ATTACHMENT REQUIREMENTS....10
PROHIBITED LEDGER ATTACHMENTS....12
LEDGER BOARD FASTENERS....12
FREE-STANDING DECKS....14
DECK STABILITY....14
GUARD REQUIREMENTS....15
GUARD POST ATTACHMENTS....16
STAIR REQUIREMENTS....17
STAIR HANDRAIL REQUIREMENTS....18
STAIR FOOTING REQUIREMENTS....19
STAIR LIGHTING REQUIREMENTS....19
FRAMING AT CHIMNEY OR BAY WINDOW....19

MINIMUM REQUIREMENTS

1. This document applies to single level residential wood decks only.
2. All lumber shall be identified by the grade mark of, or certificate of inspection issued by, an approved lumber grading or inspection bureau or agency (www.alsc.org). All lumber shall be a naturally durable species (such as Redwood or Western Cedars) or be pressure-treated with an approved process and preservative in accordance with American Wood Protection Association standards (such as but not limited to those shown in Table 1) [R317 and R318]. All lumber in contact with the ground shall be approved preservative treated wood suitable for ground contact. [R317.1.2]
3. All nails shall meet the requirements of *ASTM F 1667*. Threaded nails as stated in this document include helical (spiral) and annular (ring-shank) nails. Wood screws shall meet the requirements of *ANSI/ASME B18.6.1*. Bolts and lag screws shall meet the requirements of *ANSI/ASME B18.2.1*.
4. Throughout this document, ½" diameter bolts and lag screws are specified for various connections. Edge distance and spacing requirements are based on ½" diameter fasteners. If larger (or smaller) fasteners are specified, edge distance and spacing needs to be adjusted.
5. To resist corrosion, the following is required [R317.3]:
   - All screws, bolts, and nails for use with preservative treated wood shall be hot-dipped zinc-coated galvanized steel, stainless steel, silicon bronze, or copper. Fasteners to be hot-dipped galvanized shall meet the requirements of *ASTM A 153, Standard Specification for Zinc Coating (Hot-Dip) on Iron and Steel Hardware,* Class D for fasteners $^3/_8$" diameter and smaller or Class C for fasteners with diameters over $^3/_8$".
   - Fasteners other than nails and timber rivets shall be permitted to be of mechanically deposited zinc-coated steel with coating weights in accordance with *ASTM B 695*, Class 55, minimum.
   - All hardware (joist hangers, cast-in-place post anchors, etc.) shall be galvanized or shall be stainless steel. Hardware to be hot-dipped prior to fabrication shall meet *ASTM A 653, Standard Specification for Steel Sheet, Zinc-Coated (Galvanized) or Zinc-Iron Alloy-Coated (Galvannealed) by the Hot-Dip Process*, G-185 coating. Hardware to be hot-dipped galvanized after fabrication shall meet *ASTM A123, Specification for Zinc (Hot-Dip Galvanized) Coatings on Iron and Steel Products.*
   - Fasteners and connectors exposed to salt water or located within 300 feet of a salt water shoreline shall be stainless steel grade 304 or 316.
   - Other coated or non-ferrous fasteners or hardware shall be as approved by the authority having jurisdiction.
6. Decks supporting large concentrated loads such as hot tubs are beyond the scope of this document.
7. This document does not apply to decks which will experience snow loads, snow drift loads, or sliding snow loads that exceed 40 psf. This document does not address wind or seismic design issues.
8. Flashing shall be corrosion-resistant metal [R703.8] of minimum nominal 0.019-inch thickness or approved non-metallic material. Aluminum should not be used in direct contact with lumber treated with preservatives that contain copper such as ACQ, Copper Azole, or ACZA.
9. Decks shall not be used or occupied until final inspection and approval is obtained.
10. This document is not intended to preclude the use of other construction methods or materials not shown herein.

Table 1. Common preservative treatments and retention levels (pcf) for sawn lumber in ground contact.[a]

Species	ACQ-B	ACQ-C	ACQ-D	CA-B	CuN-W
Southern Pine	0.40	0.40	0.40	0.21	0.11
Douglas Fir-Larch	0.40	0.40	NR	0.21	0.11
Hem-Fir	0.40	0.40	0.40	0.21	0.11
Ponderosa Pine	0.40	0.40	0.40	0.21	0.11
Red Pine	0.40	0.40	0.40	0.21	0.11
Spruce-Pine-Fir	NR	0.40	NR	NR	NR
Redwood	NR	NR	NR	NR	NR

[a] Preservatives and retentions listed in Table 1 are based on the American Wood Protection Association (AWPA) *Book of Standards*. NR = Treatments Not Recommended.

DECKING REQUIREMENTS

All decking material shall be composed of dimension lumber (2" nominal thickness) or span rated decking in accordance with the American Lumber Standard Committee *Policy for Evaluation of Recommended Spans for Span Rated Decking Products (November 5, 2004)*. Attach decking to each joist with 2-8d threaded nails or 2-#8 screws. Space decking boards approximately $^1/_8$" apart. See Figure 11 for decking connection requirements at the rim joist. Decking may be placed from an angle perpendicular to the joists to an angle of 45 degrees to the joists. Each segment of decking must bear on a minimum of 4 joists (or 4 supports).

Decking not meeting these requirements may be substituted when the product has been approved by the authority having jurisdiction.

JOIST SIZE

The span of a joist is measured from the centerline of bearing at one end of the joist to the centerline of bearing at the other end of the joist and does not include the length of the overhangs. Use Table 2 to determine joist span based on lumber size and joist spacing. See Figure 1 and Figure 2 for joist span types.

Table 2. Maximum Joist Spans (L_J)

		Joist Spacing (o.c.)					
		Without Overhangs[1]			With Overhangs up to $L_J/4$[2]		
Species	Size	12"	16"	24"	12"	16"	24"
Southern Pine	2x8	13' - 8"	12' - 5"	10' - 2"	10' - 9"	10' - 9"	10' - 2"
	2x10	17' - 5"	15' - 10"	13' - 1"	15' - 6"	15' - 6"	13' - 1"
	2x12	18' - 0"	18' - 0"	15' - 5"	18' - 0"	18' - 0"	15' - 5"
Douglas Fir-Larch, Hem-Fir, SPF[3]	2x8	12' - 6"	11' - 1"	9' - 1"	9' - 5"	9' - 5"	9' - 1"
	2x10	15' - 8"	13' - 7"	11' - 1"	13' - 7"	13' - 7"	11' - 1"
	2x12	18' - 0"	15' - 9"	12' - 10"	18' - 0"	15' - 9"	12' -10"
Redwood, Western Cedars, Ponderosa Pine[4], Red Pine[4]	2x8	11' - 8"	10' - 7"	8' - 8"	8' - 6"	8' - 6"	8' - 6"
	2x10	14' - 11"	13' - 0"	10' - 7"	12' - 3"	12' - 3"	10' - 7"
	2x12	17' - 5"	15' - 1"	12' - 4"	16' - 5"	15' - 1"	12' - 4"

1. Assumes 40 psf live load, 10 psf dead load, L/360 deflection, No. 2 grade, and wet service conditions. See Figure 1B.
2. Assumes 40 psf live load, 10 psf dead load, L/180 cantilever deflection with 220 lb point load, No. 2 grade, and wet service conditions. See Figure 1A and Figure 2.
3. Incising assumed for refractory species including Douglas fir-larch, hem-fir, and spruce-pine-fir.
4. Design values based on northern species with no incising assumed.

Figure 1A. Joist Span – Deck Attached at House and Bearing Over Beam

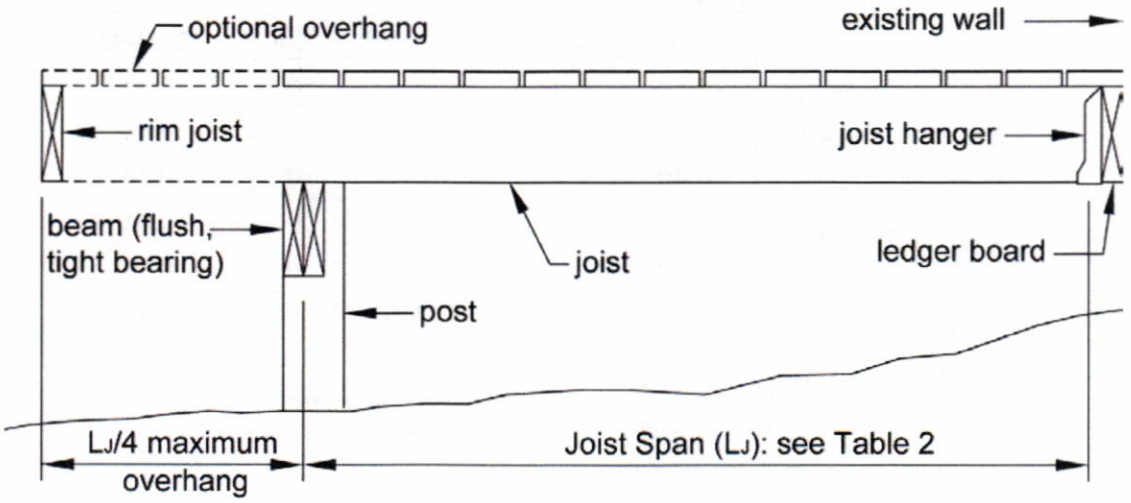

Figure 1B. Joist Span – Joists Attached at House and to Side of Beam

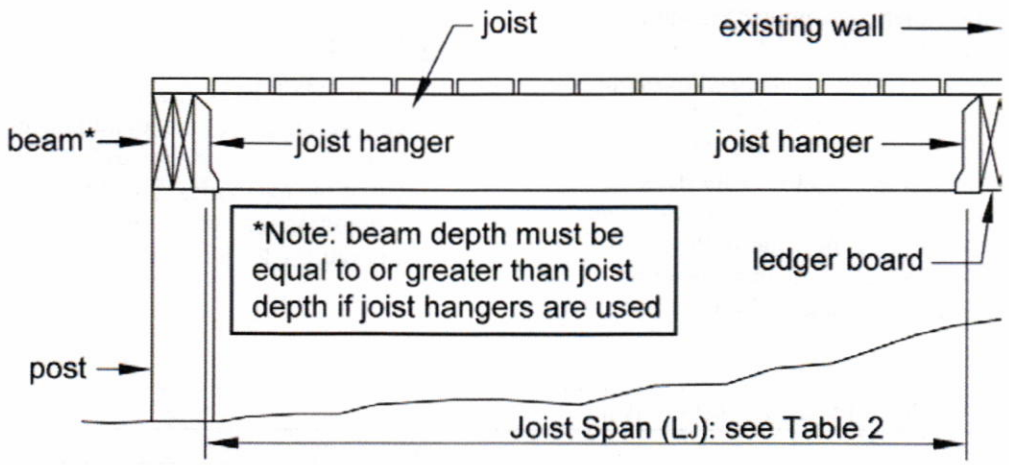

Figure 2. Joist Span – Free Standing Deck

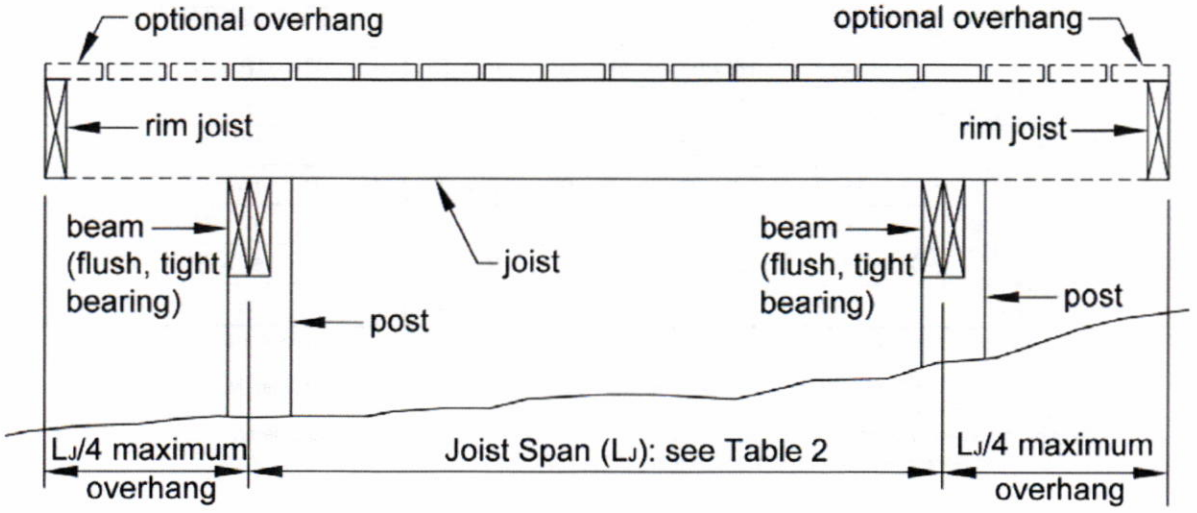

BEAM SIZE & ASSEMBLY REQUIREMENTS

Deck beam spans shall be in accordance with Table 3 and can extend past the post centerline up to $L_B/4$ as shown in Figure 3. Joists may bear on the beam and extend past the beam centerline up to $L_J/4$ as shown in Figures 1A and 2, or the joists may attach to the side of the beam with joist hangers as shown in Figure 1B.

Joists shall not frame in from opposite sides of the same beam. See JOIST-TO-BEAM CONNECTION details, Figure 6.

Where multiple 2x members are used, the deck's beam is assembled by attaching the members identified in Table 3 in accordance with Figure 4. [Table R602.3(1)]

Table 3. Deck Beam Spans (L_B)[1] for Joists Framing from One Side Only

		Joist Spans (L_J) Less Than or Equal to:						
Species	**Size[4]**	**6'**	**8'**	**10'**	**12'**	**14'**	**16'**	**18'**
Southern Pine	2-2x6	7' - 1"	6' - 2"	5' - 6"	5' - 0"	4' - 8"	4' - 4"	4' - 1"
	2-2x8	9' - 2"	7' - 11"	7' - 1"	6' - 6"	6' - 0"	5' - 7"	5' - 3"
	2-2x10	11' - 10"	10' - 3"	9' - 2"	8' - 5"	7' - 9"	7' - 3"	6' - 10"
	2-2x12	13' - 11"	12' - 0"	10' - 9"	9' - 10"	9' - 1"	8' - 6"	8' - 0"
	3-2x6	8' - 7"	7' - 8"	6' - 11"	6' - 3"	5' - 10"	5' - 5"	5' - 2"
	3-2x8	11' - 4"	9' - 11"	8' - 11"	8' - 1"	7' - 6"	7' - 0"	6' - 7"
	3-2x10	14' - 5"	12' - 10"	11' - 6"	10' - 6"	9' - 9"	9' - 1"	8' - 7"
	3-2x12	17' - 5"	15' - 1"	13' - 6"	12' - 4"	11' - 5"	10' - 8"	10' - 1"
Douglas Fir-Larch[2], Hem-Fir[2], SPF[2], Redwood, Western Cedars, Ponderosa Pine[3], Red Pine[3]	3x6 or 2-2x6	5' - 5"	4' - 8"	4' - 2"	3' - 10"	3' - 6"	3' - 1"	2' - 9"
	3x8 or 2-2x8	6' - 10"	5' - 11"	5' - 4"	4' - 10"	4' - 6"	4' - 1"	3' - 8"
	3x10 or 2-2x10	8' - 4"	7' - 3"	6' - 6"	5' - 11"	5' - 6"	5' - 1"	4' - 8"
	3x12 or 2-2x12	9' - 8"	8' - 5"	7' - 6"	6' - 10"	6' - 4"	5' - 11"	5' - 7"
	4x6	6' - 5"	5' - 6"	4' - 11"	4' - 6"	4' - 2"	3' - 11"	3' - 8"
	4x8	8' - 5"	7' - 3"	6' - 6"	5' - 11"	5' - 6"	5' - 2"	4' - 10"
	4x10	9' - 11"	8' - 7"	7' - 8"	7' - 0"	6' - 6"	6' - 1"	5' - 8"
	4x12	11' - 5"	9' - 11"	8' - 10"	8' - 1"	7' - 6"	7' - 0"	6' - 7"
	3-2x6	7' - 4"	6' - 8"	6' - 0"	5' - 6"	5' - 1"	4' - 9"	4' - 6"
	3-2x8	9' - 8"	8' - 6"	7' - 7"	6' - 11"	6' - 5"	6' - 0"	5' - 8"
	3-2x10	12' - 0"	10' - 5"	9' - 4"	8' - 6"	7' - 10"	7' - 4"	6' - 11"
	3-2x12	13' - 11"	12' - 1"	10' - 9"	9' - 10"	9' - 1"	8' - 6"	8' - 1"

1. Assumes 40 psf live load, 10 psf dead load, L/360 simple span beam deflection limit, L/180 cantilever deflection limit, No. 2 grade, and wet service conditions.
2. Incising assumed for refractory species including Douglas fir-larch, hem-fir, and spruce-pine-fir.
3. Design values based on northern species with no incising assumed.
4. Beam depth must be equal to or greater than joist depth if joist hangers are used (see Figure 6, Option 3).

Figure 3: Beam Span Types

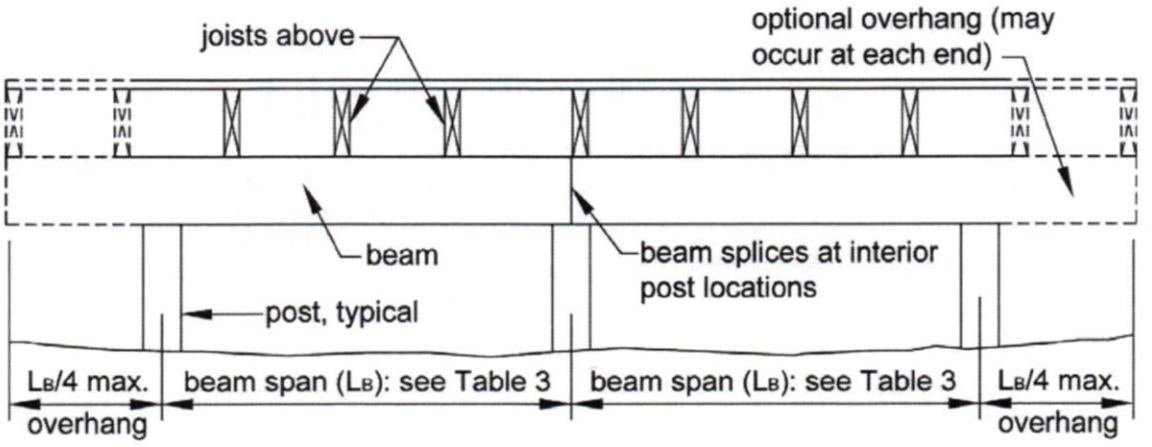

Figure 4. Beam Assembly Details

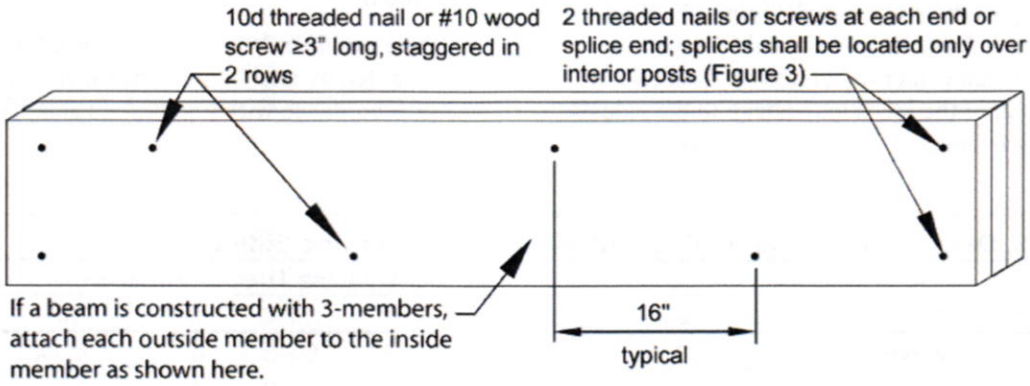

DECK FRAMING PLAN

A framing plan shows the joist and beam layout; the location of the ledger board, posts, and footings, and the type, size, and spacing of the ledger board fasteners. See Figure 5 for an example of a typical deck framing plan.

Figure 5. Typical Deck Framing Plan

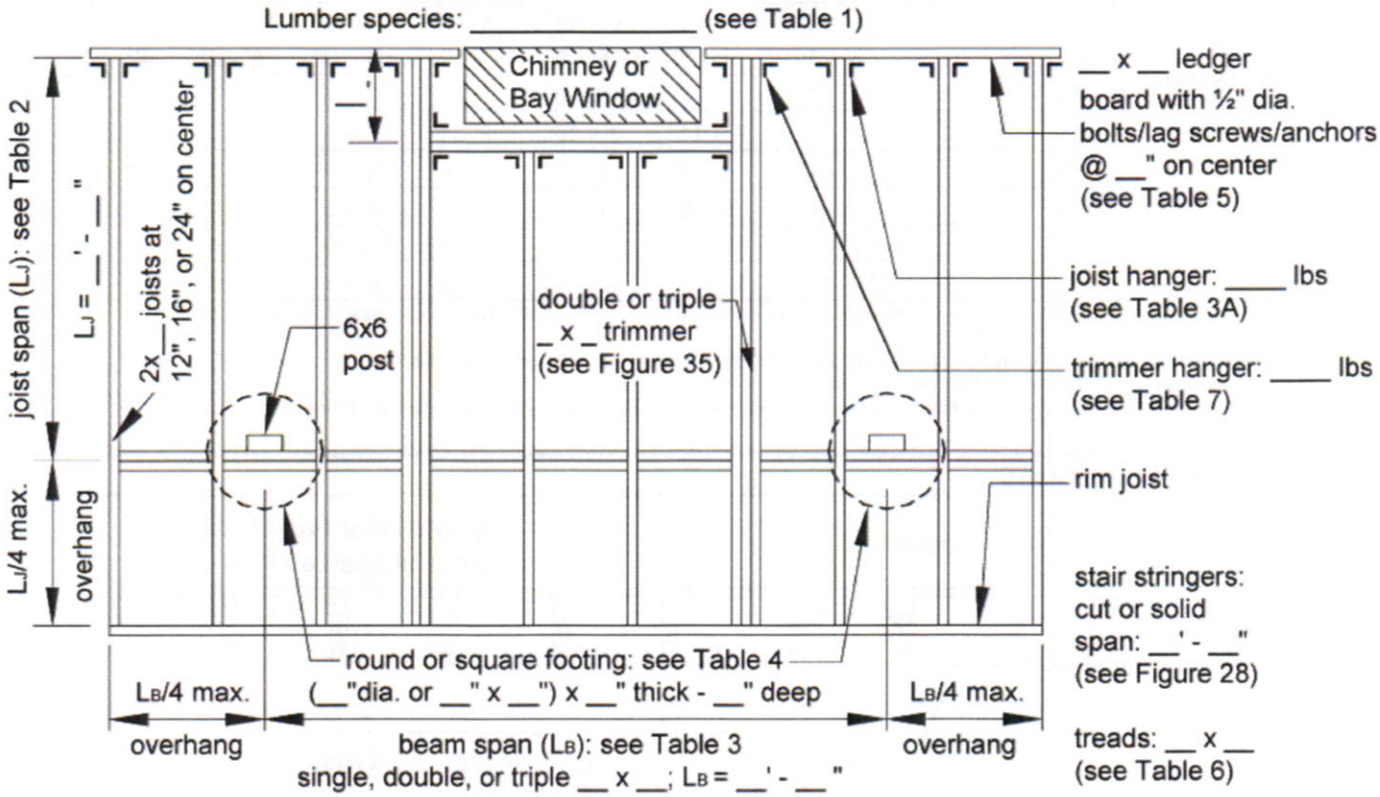

JOIST-TO-BEAM CONNECTION

Each joist shall be attached to the beam as shown in Figure 6. Joists may bear on and overhang past the beam a maximum of $L_J/4$. Use Option 1 or Option 2 to attach the joist to the beam. Option 1 shall only be used if the deck is attached to the house with a ledger (see LEDGER ATTACHMENT REQUIREMENTS) or as shown in Figure 23. Mechanical fasteners or hurricane clips used as shown in Option 2 must have a minimum capacity of 100 lbs in both uplift and lateral load directions. Joists may also attach to the side of the beam with joist hangers per Option 3. Joists shall not frame in from opposite sides of the same beam. See JOIST HANGERS for more information. Hangers, clips, and mechanical fasteners shall be galvanized or stainless steel (see MINIMUM REQUIREMENTS).

Figure 6: Joist-to-Beam Detail

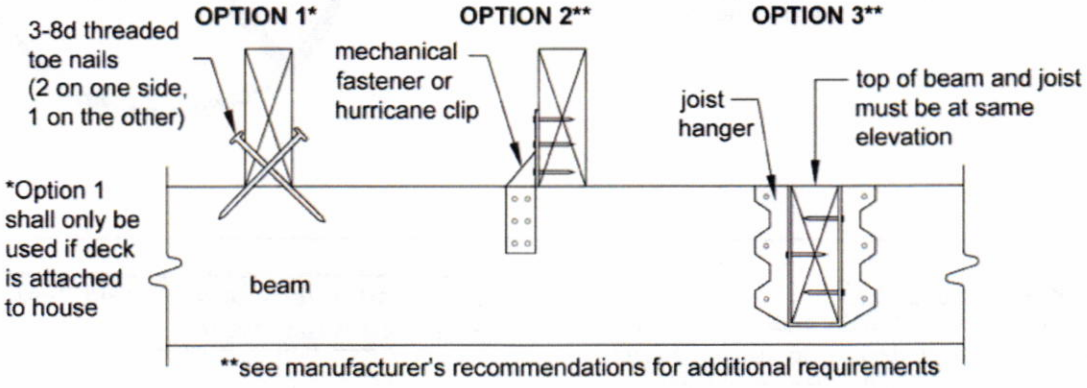

JOIST HANGERS

Joist hangers, as shown in Figure 7, shall each have a minimum download capacity in accordance with Table 3A. The joist hanger shall be selected from an approved manufacturer's product data based on the dimensions of the joist or header it is carrying. Joist hangers shall be galvanized or stainless steel (see MINIMUM REQUIREMENTS).

Use joist hangers with inside flanges when clearances to the edge of the beam or ledger board dictate. **Do not use clip angles or brackets to support joists.**

Figure 7: Typical Joist Hangers

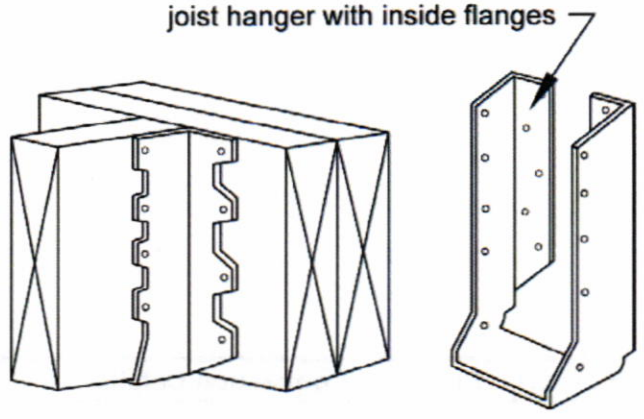

Table 3A: Joist Hanger Download Capacity

Joist Size	Minimum Capacity, lbs
2x8	600
2x10	700
2x12	800

POST REQUIREMENTS

All deck post sizes shall be 6x6 (nominal) or larger, and the maximum height shall be 14'-0" measured to the underside of the beam. Posts shall be centered on footings. Cut ends of posts shall be field treated with an approved preservative (such as copper naphthenate) [R402.1.2]. The beam shall be attached to the post by notching the 6x6 as shown in Figure 8 or by providing an approved post cap to connect the beam and post as shown in Figure 10. All 3-ply beams shall be connected to the post by a post cap. All thru-bolts shall have washers under the bolt head and nut. Attachment of the beam to the side of the post without notching is prohibited (see Figure 9).

Figure 8. Post-to-Beam Attachment Requirements

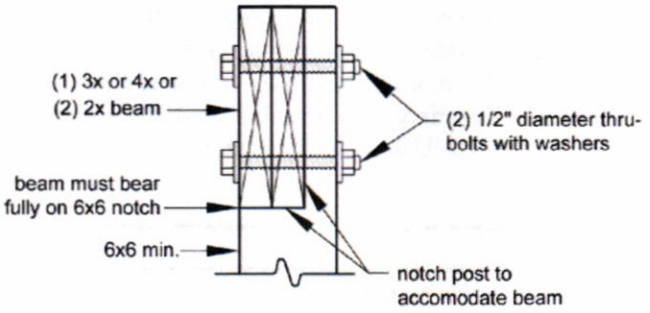

Figure 9. Prohibited Post-to-Beam Attachment Condition

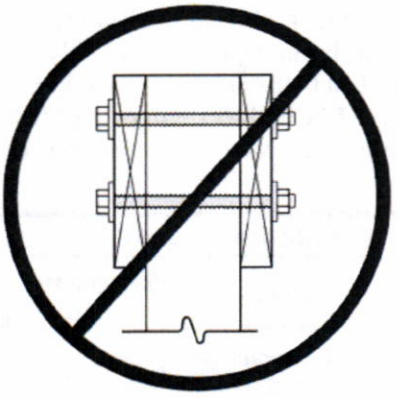

RIM JOIST REQUIREMENTS

Attach a continuous rim joist to the ends of joists as shown in Figure 11. Attach decking to the rim joist as shown in Figure 11. For more decking attachment requirements, see DECKING REQUIREMENTS.

Figure 10. Alternate Approved Post-to-Beam Post Cap Attachment

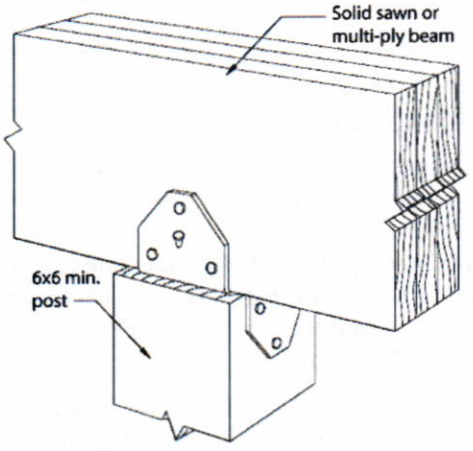

Figure 11. Rim Joist Connection Details

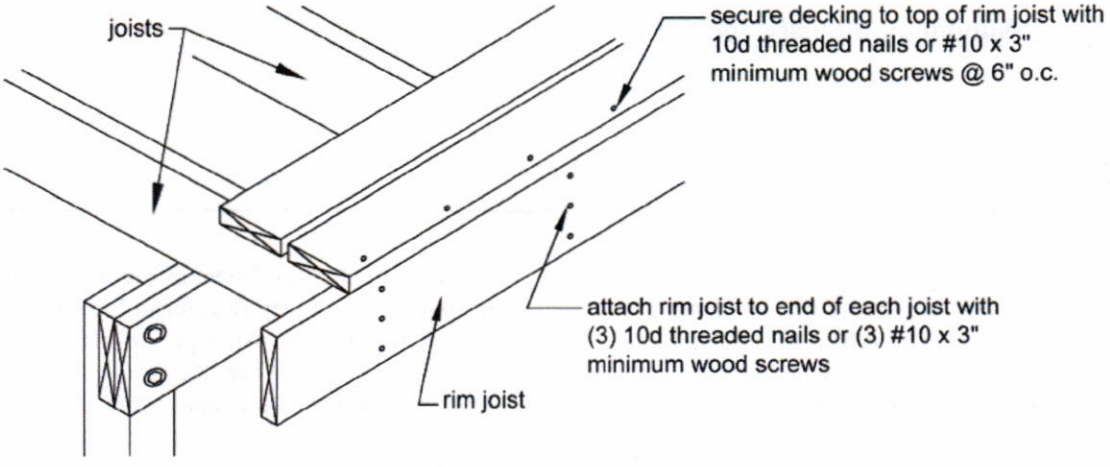

FOOTINGS [R403]

See Figure 12 and Table 4 for footing size, footing thickness, and post attachment options and requirements. All footings shall bear on solid ground and shall be placed at least 12 inches below the undisturbed ground surface or below the frost line, whichever is deeper. Contact the authority having jurisdiction to determine the specified frost line. Bearing conditions shall be verified in the field by the building official prior to placement of concrete. Where the building official determines that in-place soils with an allowable bearing capacity of less than 1,500 psf are likely to be present at the site, the allowable bearing capacity shall be determined by a soils investigation. DECK FOOTINGS CLOSER THAN 5'-0" TO AN EXISTING EXTERIOR HOUSE WALL MUST BEAR AT THE SAME ELEVATION AS THE FOOTING OF THE EXISTING HOUSE FOUNDATION.

Do not construct footings over utility lines or enclosed meters. Contact local utilities (call 811) before digging.

Pre-manufactured post anchors shall be galvanized. See MINIMUM REQUIREMENTS.

Table 4. Footing Sizes[1]

Beam Span, L_B	Joist Span L_J	Round Footing Diameter	Square Footing Dimension	Footing Thickness[2]
6'	≤10'	15"	13"	6"
	≤14'	17"	15"	6"
	≤18'	20"	18"	7"
8'	≤10'	17"	15"	6"
	≤14'	20"	18"	8"
	≤18'	23"	21"	9"
10'	≤10'	19"	17"	7"
	≤14'	22"	20"	9"
	≤18'	25"	23"	10"
12'	≤10'	21"	19"	8"
	≤14'	24"	22"	10"
	≤18'	28"	26"	11"
14'	≤10'	22"	20"	9"
	≤14'	26"	24"	11"
	≤18'	30"	28"	12"
16'	≤10'	24"	22"	9"
	≤14'	28"	26"	12"
	≤18'	32"	30"	13"
18'	≤10'	25"	23"	10"
	≤14'	30"	28"	12"
	≤18'	34"	32"	14"

1. Assumes 1,500 psf soil bearing capacity.
2. Assumes 2,500 psi compressive strength of concrete. Coordinate footing thickness with post base and anchor requirements.

Figure 12. Typical Footing Options

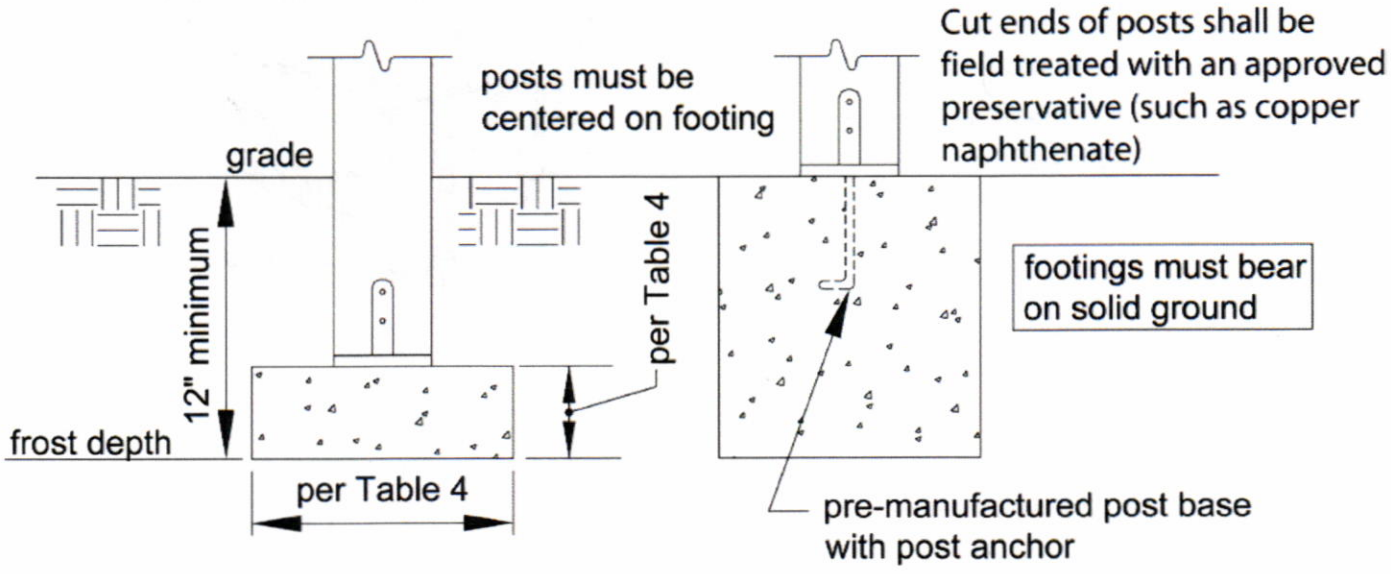

LEDGER ATTACHMENT REQUIREMENTS [R502.2.2]

GENERAL: Attach the ledger board, which shall be equal to or greater than the deck joist depth but less than or equal to the rim joist depth, to the existing exterior wall in accordance with Figure 14 through Figure 16. When attachments are made to the existing house band joist, the band joist shall be capable of supporting the new deck. If this cannot be verified or conditions at the existing house differ from the details herein, then either a free-standing deck or full plan submission is required. See FREE-STANDING DECKS.

SIDING AND FLASHING: House siding or the exterior finish system must be removed prior to installation of the ledger board. Approved corrosion resistant flashing is required at any ledger board connection to a wall of wood framed construction (see MINIMUM REQUIREMENTS). See Figure 14 for continuous flashing with drip edge. The threshold shall be carefully flashed and caulked to prevent water intrusion due to splash from the deck or melting snow and ice.

MANUFACTURED WOOD I-JOIST: The term "I-Joist" denotes manufactured wood "I" joists (see Figure 13A). Many new homes constructed with wood I-joists include 1" or thicker engineered wood products (EWP) – such as oriented strand board (OSB) or structural composite lumber (SCL) including laminated veneer lumber (LVL) – as band joists (or rim boards) that can support the attachment of a deck (see Figure 14). However, some older homes might be constructed with band boards that are too thin (less than 1") to support a deck. In such cases, a free-standing deck or a full plan submission is required.

MANUFACTURED WOOD TRUSS: A metal plate connected wood truss (MPCWT) is an engineered, prefabricated structural component designed for each specific application. MPCWT's used in residential floors are often installed with a 2x4 lumber "ribbon" at the ends of the trusses (see Figure 13B) to tie the ends of the trusses together. The ribbon board, by itself, is not intended to support the deck ledger and deck. Installing residential decks when the floor system for the house uses MPCWT requires a standard detail provided by the truss designer, a free-standing deck, or a full plan submission. Refer to the WTCA Technical Note – *Attachment of Residential Decks to Wood Truss Floor Systems* for special blocking details and attachment requirements (www.sbcindustry.com).

Figure 13A. Wood I-Joist Profile

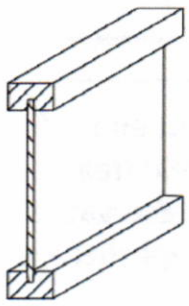

Figure 13B. Metal Plate Connected (MPC) Wood Floor Trusses with a 2x4 Lumber "Ribbon" at the Ends of the Trusses

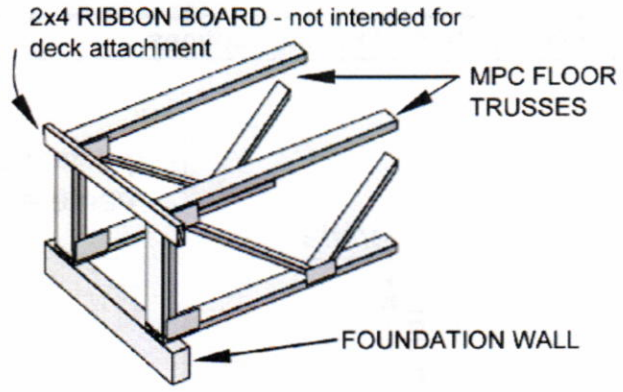

Figure 14. General Attachment of Ledger Board to Band Joist or Rim Board

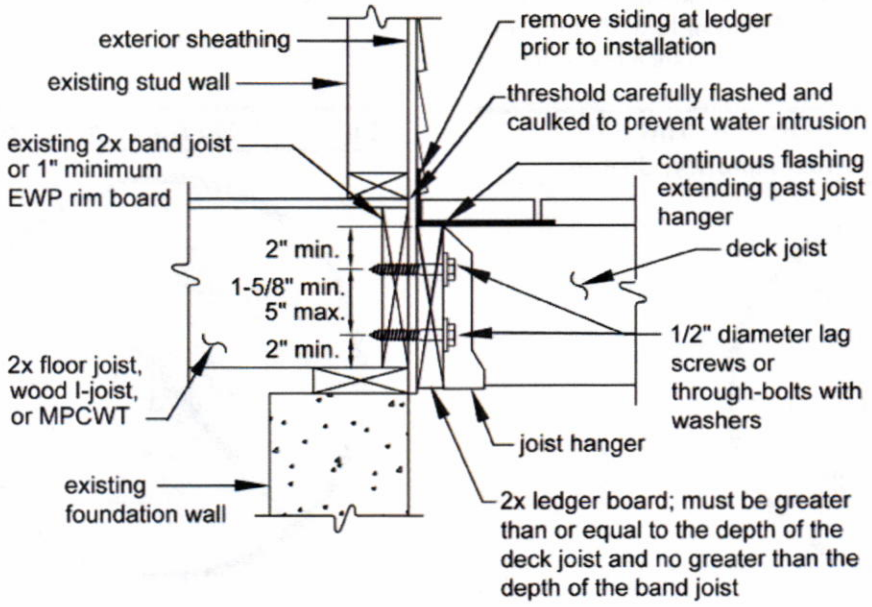

Figure 15. Attachment of Ledger Board to Foundation Wall (Concrete or Solid Masonry)

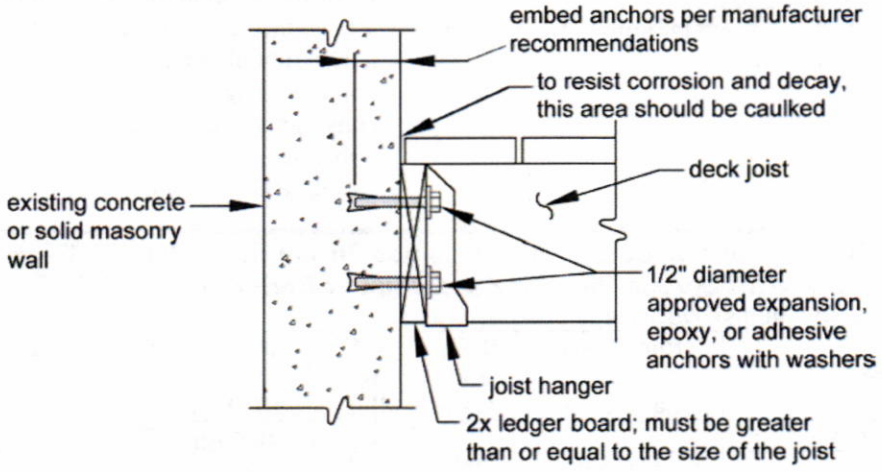

Figure 16. Attachment of Ledger Board to Foundation Wall (Hollow Masonry)

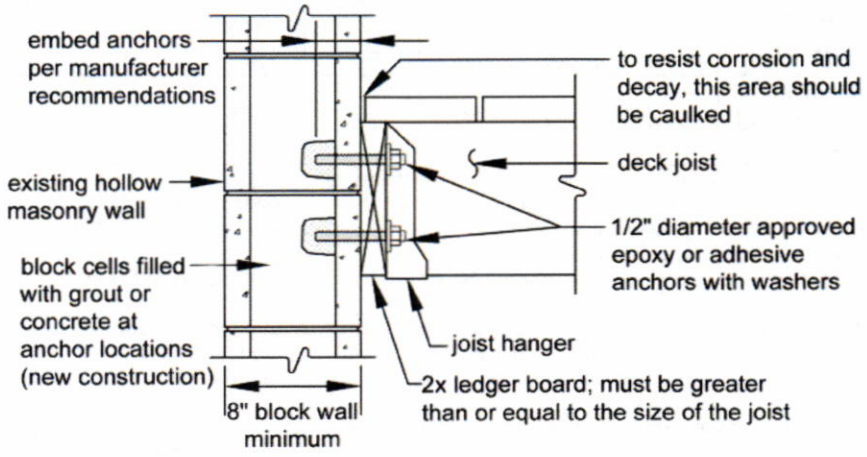

PROHIBITED LEDGER ATTACHMENTS

Attachments to exterior veneers (brick, masonry, stone) and to cantilevered floor overhangs or bay windows are prohibited (see Figures 17 and 18). In such cases the deck shall be free-standing (see FREE-STANDING DECKS).

Figure 17: No Attachment to or Through Exterior Veneers (Brick, Masonry, Stone)

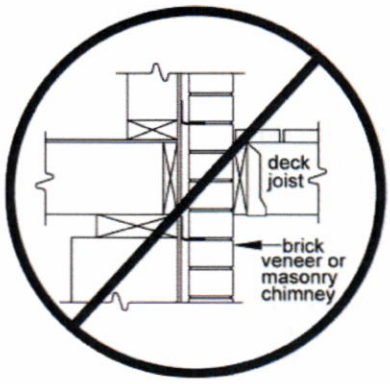

Figure 18: No Attachment to House Overhang

LEDGER BOARD FASTENERS

Only those fasteners noted below are permitted. LEAD ANCHORS ARE PROHIBITED.

Deck ledger connection to band joist or rim board. The connection between a deck ledger and a 2-inch nominal lumber band joist (1-½" actual) or EWP rim board bearing on a sill plate or wall plate shall be constructed with ½" lag screws or bolts with washers per Table 5 and Figure 19 (see MINIMUM REQUIREMENTS).

Table 5. Fastener Spacing for a Southern Pine, Douglas Fir-Larch, or Hem-Fir Deck Ledger and a 2-inch Nominal Solid-Sawn Spruce-Pine-Fir Band Joist or EWP Rim Board[3,4,5,6,8]
(Deck Live Load = 40 psf, Deck Dead Load = 10 psf)

Joist Span	Rim Board or Band Joist	6'-0" and less	6'-1" to 8'-0"	8'-1" to 10'-0"	10'-1" to 12'-0"	12'-1" to 14'-0"	14'-1" to 16'-0"	16'-1" to 18'-0"
Connection Details	**On-Center Spacing of Fasteners**							
½" diameter lag screw[1] with $^{15}/_{32}$" maximum sheathing	1" EWP	24"	18"	14"	12"	10"	9"	8"
	1-$^{1}/_{8}$" EWP	28"	21"	16"	14"	12"	10"	9"
	1-½" Lumber	30"	23"	18"	15"	13"	11"	10"
½" diameter bolt with $^{15}/_{32}$" maximum sheathing	1" EWP	24"	18"	14"	12"	10"	9"	8"
	1-$^{1}/_{8}$" EWP	28"	21"	16"	14"	12"	10"	9"
	1-½" Lumber	36"	36"	34"	29"	24"	21"	19"
½" diameter bolt with $^{15}/_{32}$" maximum sheathing and ½" stacked washers[2,7]	1-½" Lumber	36"	36"	29"	24"	21"	18"	16"

1 The tip of the lag screw shall fully extend beyond the inside face of the band joist.
2 The maximum gap between the face of the ledger board and face of the wall sheathing shall be ½".
3 Ledgers shall be flashed or caulked to prevent water from contacting the house band joist (see Figures 14, 15, and 16).
4 Lag screws and bolts shall be staggered per Figure 19.
5 Deck ledgers shall be minimum 2x8 pressure-preservative-treated No.2 grade lumber, or other approved materials as established by standard engineering practice.
6 When solid-sawn pressure-preservative-treated deck ledgers are attached to engineered wood products (minimum 1" thick wood structural panel band joist or structural composite lumber including laminated veneer lumber), the ledger attachment shall be designed in accordance with accepted engineering practice. Tabulated values based on 300 lbs and 350 lbs for 1" and 1-$^{1}/_{8}$" EWP rim board, respectively.
7 Wood structural panel sheathing, gypsum board sheathing, or foam sheathing not exceeding 1" thickness shall be permitted. The maximum distance between the face of the ledger board and the face of the band joist shall be 1".
8 Fastener spacing also applies to southern pine, Douglas fir-larch, and hem-fir band joists.

Placement of lag screws or bolts in deck ledgers
The lag screws or bolts shall be placed as shown in Figure 19. The lag screws or bolts shall be staggered from the top to the bottom along the horizontal run of the deck ledger (see Figure 19). Proper installation of lag screws or bolts shall be verified by the authority having jurisdiction.

Figure 19: Ledger Board Fastener Spacing and Clearances

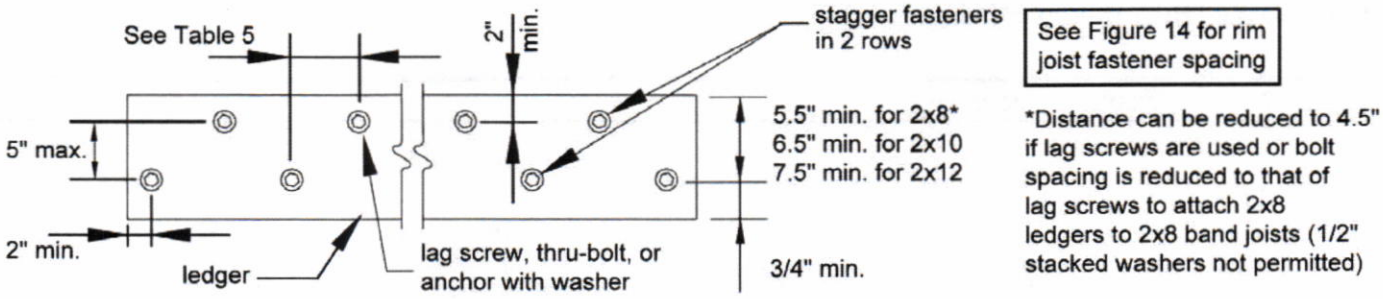

Thru-Bolts
Thru-bolts shall have a diameter of ½". Pilot holes for thru-bolts shall be $^{17}/_{32}$" to $^{9}/_{16}$" in diameter. Thru-bolts require washers at the bolt head and nut.

Expansion and Adhesive Anchors
Use approved expansion or adhesive anchors when attaching a ledger board to a concrete or solid masonry wall as shown in Figure 15 or a hollow masonry wall with a grouted cell as shown in Figure 16. Expansion and adhesive anchor bolts shall have a diameter of ½". Minimum spacing and embedment length shall be per the manufacturer's recommendations. All anchors must have washers.

Lag Screws
Lag screws shall have a diameter of ½" (see MINIMUM REQUIREMENTS). Lag screws may be used only when the field conditions conform to those shown in Figure 14. See Figure 20 for lag screw length and shank requirements. All lag screws shall be installed with washers.

Figure 20: Lag Screw Requirements

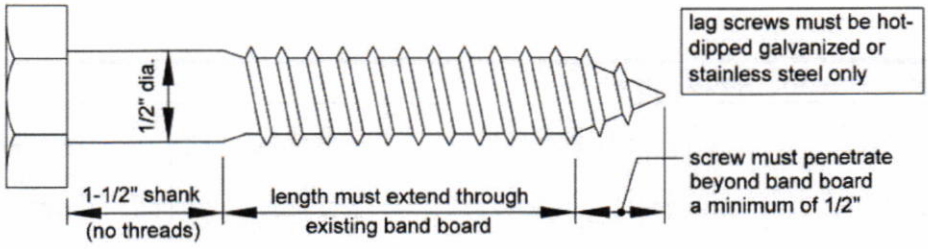

Lag screw installation requirements: Each lag screw shall have pilot holes drilled as follows: 1) Drill a ½" diameter hole in the ledger board, 2) Drill a $^{5}/_{16}$" diameter hole into the band board of the existing house. DO NOT DRILL A ½" DIAMETER HOLE INTO THE BAND BOARD.

The threaded portion of the lag screw shall be inserted into the pilot hole by turning. DO NOT DRIVE LAG SCREWS WITH A HAMMER. Use soap or a wood-compatible lubricant as required to facilitate tightening. Each lag screw shall be thoroughly tightened (snug but not over-tightened to avoid wood damage).

FREE-STANDING DECKS

Decks which are free-standing do not utilize the exterior wall of the existing house to support vertical loads (see Figure 21); instead, an additional beam with posts is provided at or within L/4 of the existing house. THE ASSOCIATED DECK POST FOOTINGS SHALL BE PLACED AT THE SAME ELEVATION AS THE EXISTING HOUSE FOOTING IF LOCATED CLOSER THAN 5'-0" TO AN EXISTING HOUSE WALL (see Figure 2 and Figure 12). For houses with basements, a cylindrical footing (caisson) is recommended to minimize required excavation at the basement wall. Beam size is determined by Table 3.

Figure 21. Free-Standing Deck

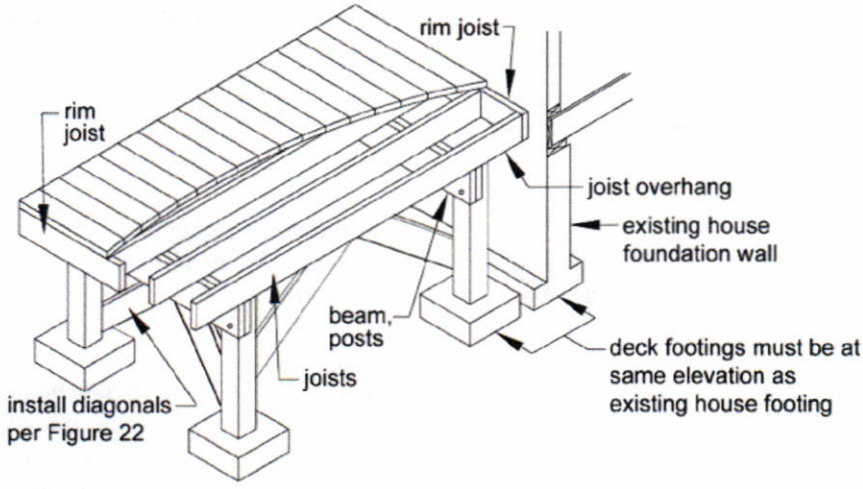

DECK STABILITY

Decks greater than 2 feet above grade shall be provided with diagonal bracing.

Figure 22. Diagonal Bracing Requirements

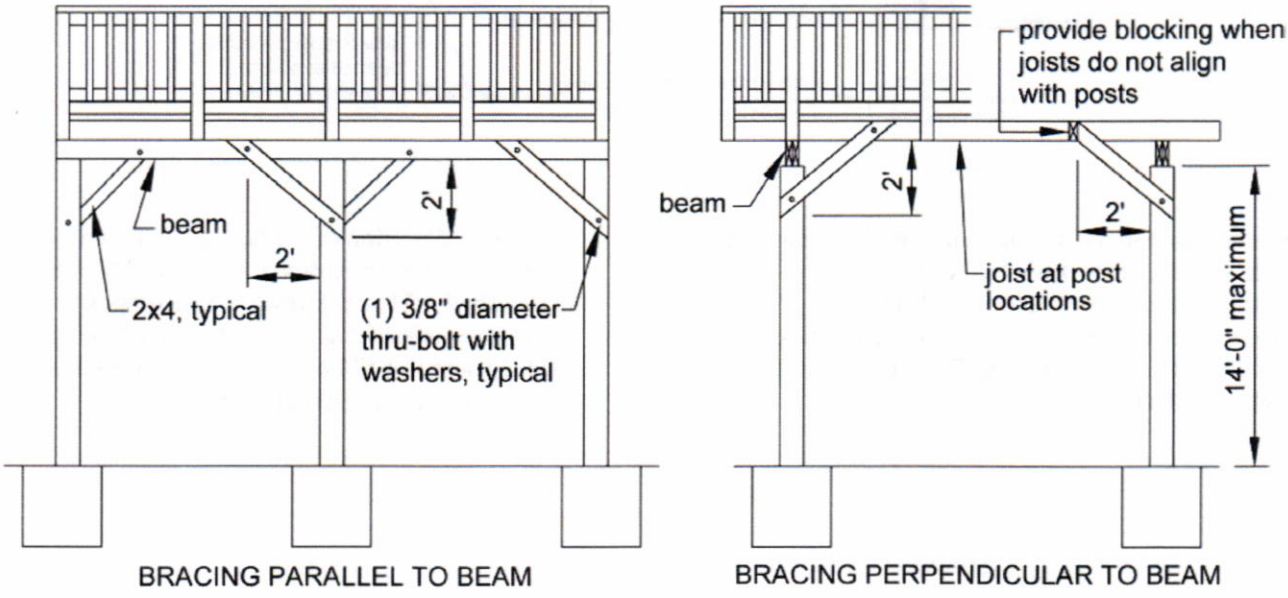

Diagonal Bracing: Provide diagonal bracing both parallel and perpendicular to the beam at each post as shown in Figure 22. When parallel to the beam, the bracing shall be bolted to the post at one end and beam at the other. When perpendicular to the beam, the bracing shall be bolted to the post at one end and a joist or blocking between joists at the other. When a joist does not align with the bracing location, provide blocking between the adjacent joists. Decks attached to the house as shown in Figure 23A do not require diagonal bracing perpendicular to the house. Diagonal bracing parallel to the house may be omitted at the beam adjacent to the house for a free-standing deck attached as shown in Figure 23.

Free-standing Deck - Attachment to House: Attach the deck rim joist to the existing house exterior wall as shown in Figure 23 for a free-standing deck. The wall must be sheathed with minimum $^3/_8$" wood structural panel sheathing. Use lag screws or thru-bolts when fastening to an existing band joist or wall stud; use expansion anchors or epoxy anchors when fastening to concrete or masonry. DO NOT ATTACH TO BRICK VENEERS. VERIFY THIS CONDITION IN THE FIELD PRIOR TO UTILIZING THIS METHOD. Fasteners shall be 16" on center and staggered in 2 rows for free-standing decks. Flashing over the rim joist is required and must be installed in accordance with the flashing provisions in the LEDGER ATTACHMENT REQUIREMENTS.

Deck Supported by Ledger - Attachment to House: Where supported by attachment to an exterior wall (Figures 14, 15, or 16), decks shall be positively anchored to the primary structure and designed for both vertical and lateral loads as applicable [R502.2.2]. The lateral load connection required shall be permitted to be in accordance with Figure 23A. Hold down tension devices shall be provided in not less than two locations per deck, and each device shall have an allowable stress design capacity of not less than 1,500 lb [R502.2.2.3]. See the *Commentary* to this document for additional information on applicability of this provision.

Figure 23. Attachment of Free-Standing Deck to House for Deck Stability

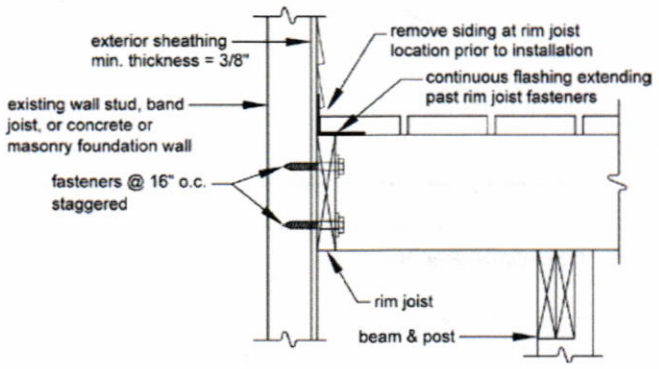

Figure 23A. Example of a Lateral Load Device for a Deck Attached to a House with a Ledger

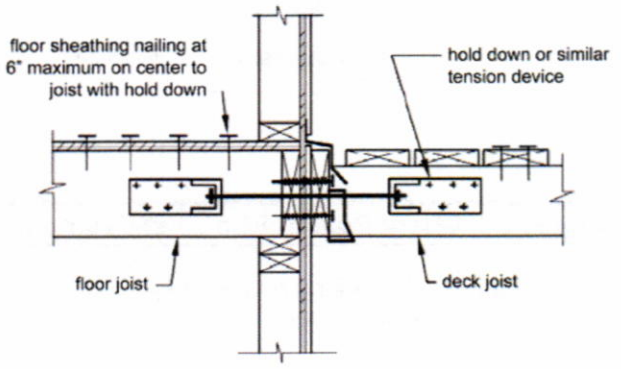

GUARD REQUIREMENTS

All decks greater than 30" above grade are required to have a guard [R312.1] - one example is shown in Figure 24. Other methods and materials may be used for guard construction when approved by the authority having jurisdiction.

Figure 24. Example Guard Detail

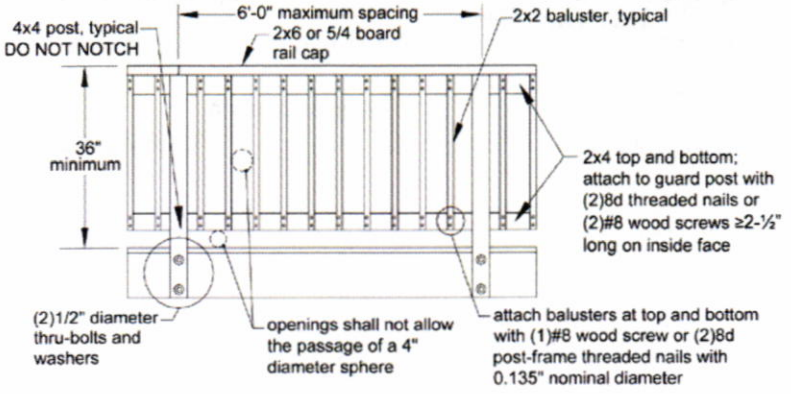

GUARD POST ATTACHMENTS

Deck guard posts shall be a minimum 4x4 (nominal) with an adjusted bending design value not less than 1,100 psi.

Guard posts for guards which run parallel to the deck joists shall be attached to the outside joist per Figure 25. Guard posts for guards that run perpendicular to the deck joists shall be attached to the rim joist in accordance with Figure 26. Only hold down anchor models meeting these minimum requirements shall be used. Hold down anchors shall have a minimum allowable tension load of 1,800 pounds for a 36" maximum rail height and be installed in accordance with the manufacturer's instructions.

Figure 25. Guard Post to Outside Joist Example

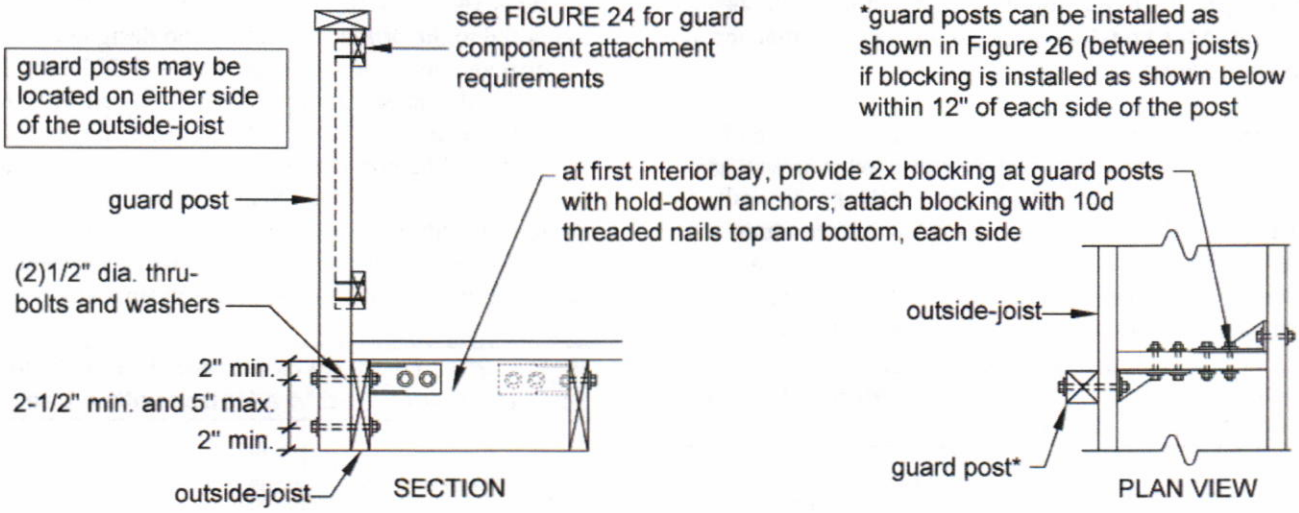

Figure 26. Guard Post to Rim Joist Example

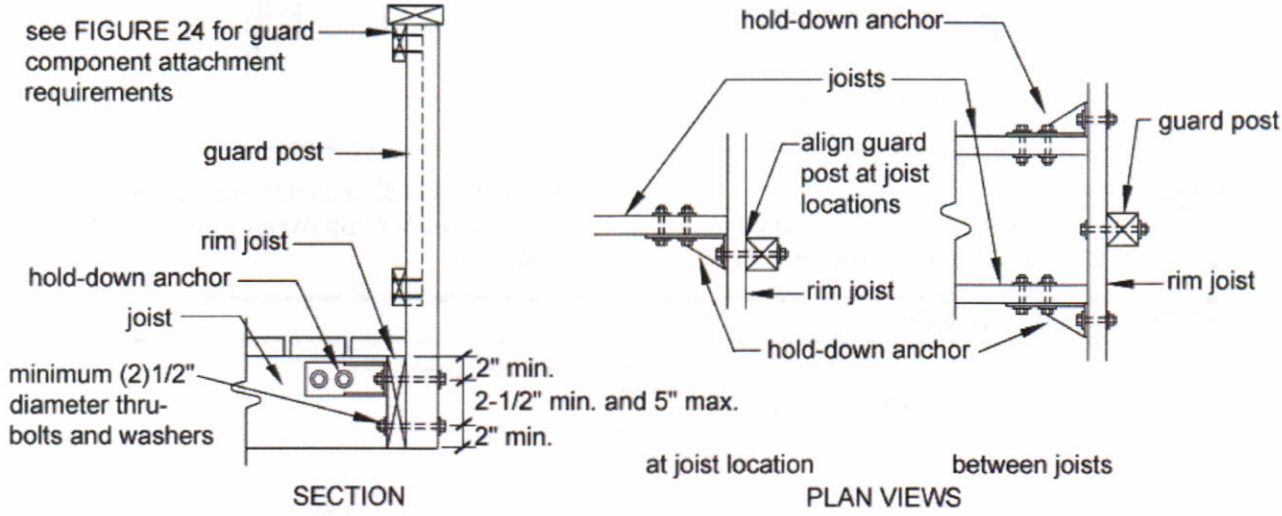

STAIR REQUIREMENTS

Stairs, stair stringers, and stair guards shall meet the requirements shown in Figure 27 through Figure 34 and Table 6 except where amended by the local jurisdiction. All stringers shall be a minimum of 2x12. Stair stringers shall not span more than the dimensions shown in Figure 28. If the stringer span exceeds these dimensions, then a 4x4 post may be provided to support the stringer and shorten its span length. The 4x4 post shall be notched and bolted to the stringer with (2) ½" diameter through-bolts with washers per Figure 8. The post shall be centered on a 12" diameter or 10" square, 6" thick footing. The footing shall be constructed as shown in Figure 34 and attached to the post as shown in Figure 12. An intermediate landing may also be provided to shorten the stringer span (see provisions below). If the total vertical height of a stairway exceeds 12'-0", then an intermediate landing shall be required. All intermediate stair landings must be designed and constructed as a free-standing deck using the details in this document. Stairs shall be a minimum of 36" in width as shown in Figure 33 [R311.7]. If only cut stringers are used, a minimum of three are required. For stairs greater than 36" in width, a combination of cut and solid stringers can be used, but shall be placed at a maximum spacing of 18" on center (see Figure 29). The width of each landing shall not be less than the width of the stairway served. Every landing shall have a minimum dimension of 36" measured in the direction of travel and no less than the width of the stairway served [R311.7].

Figure 27. Tread and Riser Detail

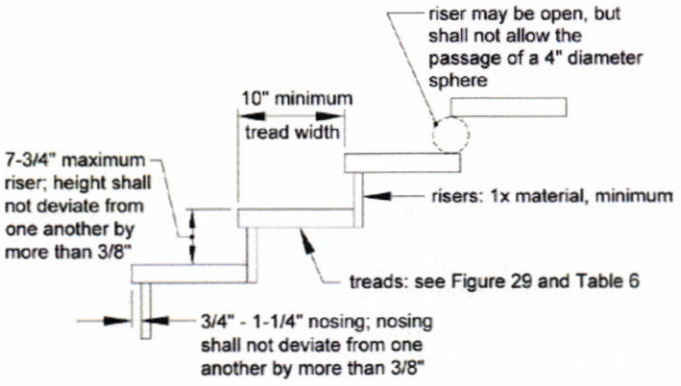

Figure 28. Stair Stringer Requirements

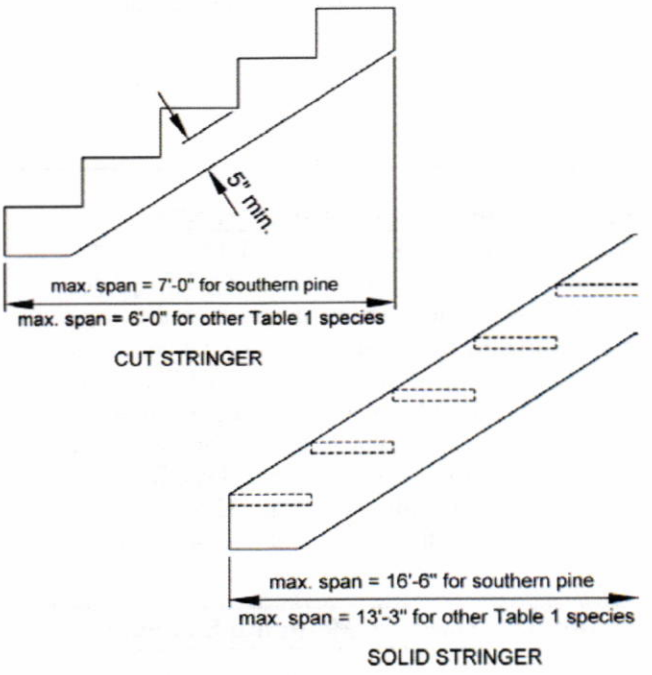

Figure 29. Tread Connection Requirements

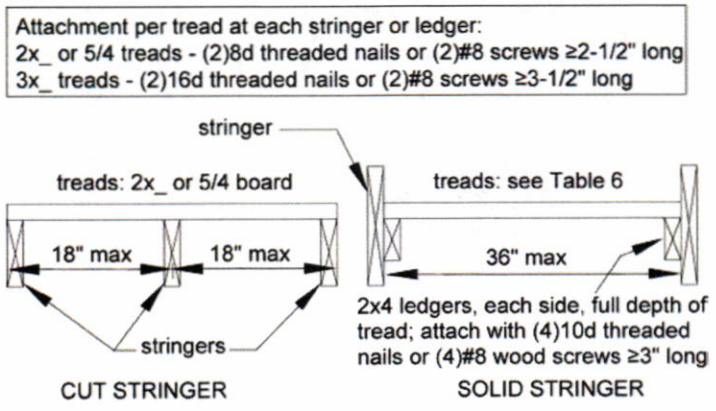

Table 6. Minimum Tread Size for Cut and Solid Stringers[1]

Species	Cut Stringer	Solid Stringer
Southern Pine	2x4 or 5/4	2x6
Douglas Fir Larch, Hem-Fir, SPF[2]	2x4 or 5/4	2x8 or 3x4
Redwood, Western Cedars, Ponderosa Pine[3], Red Pine[3]	2x4 or 5/4	2x10 or 3x4

1. Assumes 300 lb concentrated load, L/288 deflection limit, No. 2 grade, and wet service conditions.
2. Incising assumed for refractory species including Douglas fir-larch, hem-fir, and spruce-pine-fir.
3. Design values based on northern species with no incising assumed.

Figure 30. Stair Guard Requirements

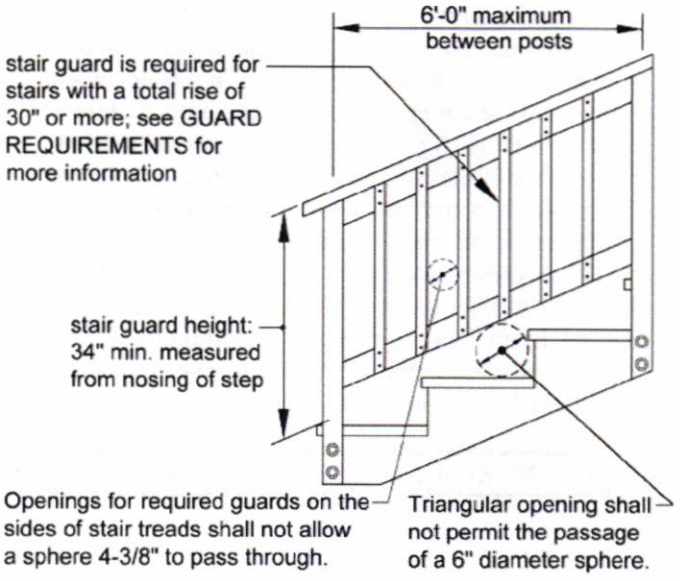

Figure 31. Stair Stringer Attachment Detail

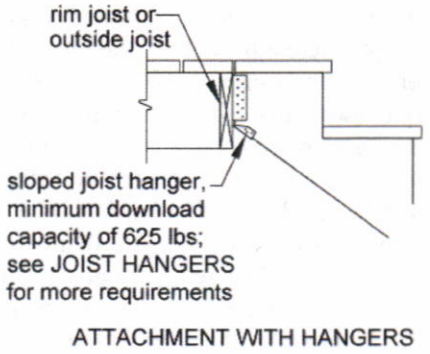

STAIR HANDRAIL REQUIREMENTS

All stairs with 4 or more risers shall have a handrail on at least one side (see Figure 32A) [R311.7.7]. The handrail height measured vertically from the sloped plane adjoining the tread nosing shall be not less than 34 inches and not more than 38 inches (see Figure 30) [R311.7.7.1]. Handrails shall be graspable and shall be composed of decay-resistant and/or corrosion resistant material. Handrails shall be Type I, Type II, or provide equivalent graspability (see Figure 32B). Type I shall have a perimeter dimension of at least 4" and not greater than 6-¼". Type II rails with a perimeter greater than 6-¼" shall provide a graspable finger recess area on both sides of the profile [R311.7.7.3]. All shapes shall have a smooth surface with no sharp corners. Handrails shall run continuously from a point directly over the lowest riser to a point directly over the highest riser and shall return to the guard at each end (see Figure 33). Handrails may be interrupted by guard posts at a turn in the stair [R311.7.7.2].

Figure 32A. Handrail Mounting Examples

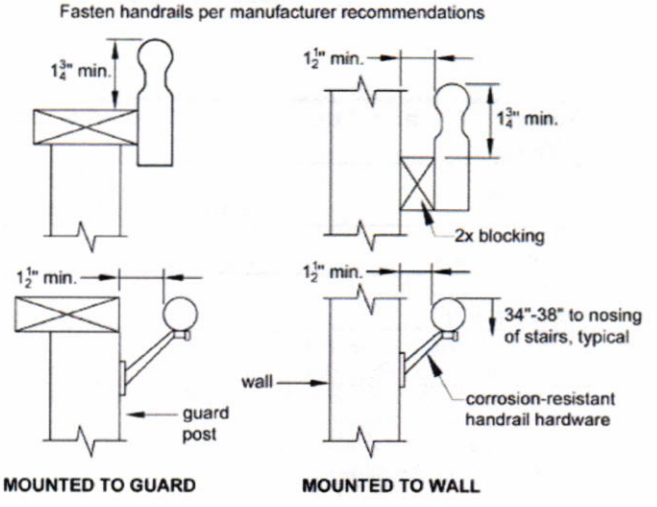

Figure 32B. Handrail Grip Size

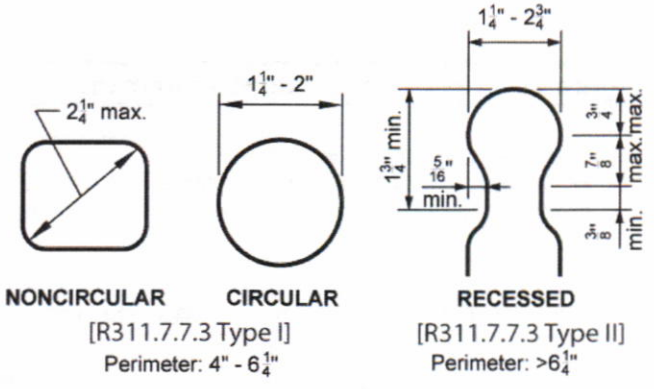

STAIR FOOTING REQUIREMENTS [R403]

Where the stairway meets grade, attach the stringers to the stair guard posts as shown in Figure 34. Posts shall bear on footings. All footings shall bear on solid ground and shall be placed at least 12 inches below the undisturbed ground surface or below the frost line, whichever is deeper (see Figure 34). Stringers shall bear on a 2x4 bearing block attached to the post as shown. Stringers shall not bear on new or existing concrete pads or patios that are not founded below this depth. When guards are not required (see GUARD REQUIREMENTS), posts may terminate below the bottom tread elevation. Bolts are only required if a guard post is required.

STAIR LIGHTING REQUIREMENTS [R303.6]

Stairways shall have a light source located at the top landing such that all stairs and landings are illuminated. The light switch shall be operated from inside the house. However, motion detected or timed switches are acceptable.

Figure 33. Miscellaneous Stair Requirements

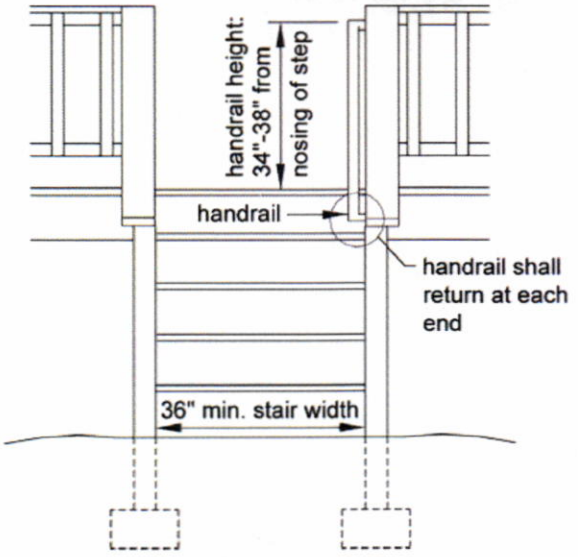

Figure 34. Stair Footing Detail

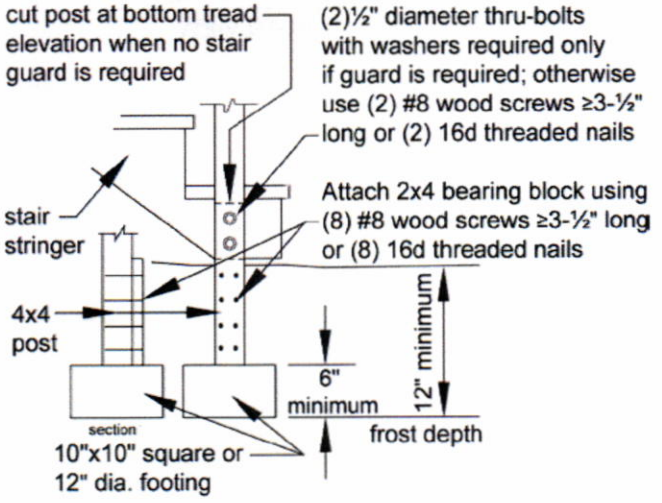

FRAMING AT CHIMNEY OR BAY WINDOW

All members at a chimney or bay window shall be framed in accordance with Figure 35. Headers may span a maximum of 6'-0". When a chimney or bay window is wider than 6'-0", one or more 6x6 posts may be added to reduce header spans to less than 6'-0". In such cases, the post footing must meet the requirements in the FOOTINGS section. Headers with a span length greater than 6'-0" require a plan submission. Headers shall be located no more than 3'-0" from the end of the trimmer joist.

Triple trimmer joists are required on each side of the header if joist spacing is 12" or 16" o.c. or if the trimmer joist span exceeds 8'-6"; otherwise, double trimmer joists are permitted. Trimmer joists may bear on the beam and extend past the beam centerline up to $L_J/4$ as shown in Figures 1A and 2, or the trimmer joist may attach to the side of the beam with joist hangers as shown in Figure 1B. Joist hangers shall each have a minimum download capacity in accordance with Table 7. Bolts or lag screws used to attach the hanger to the ledger shall fully extend through the ledger into the 2-inch nominal lumber band joist (1-½" actual) or EWP rim board. Otherwise a freestanding deck is required.

Table 7. Trimmer Joist Hanger Download Capacity

Joist Size	Minimum Capacity, lbs
2x8	1050
2x10	1380
2x12	1500

Figure 35: Detail for Framing Around a Chimney or Bay Window

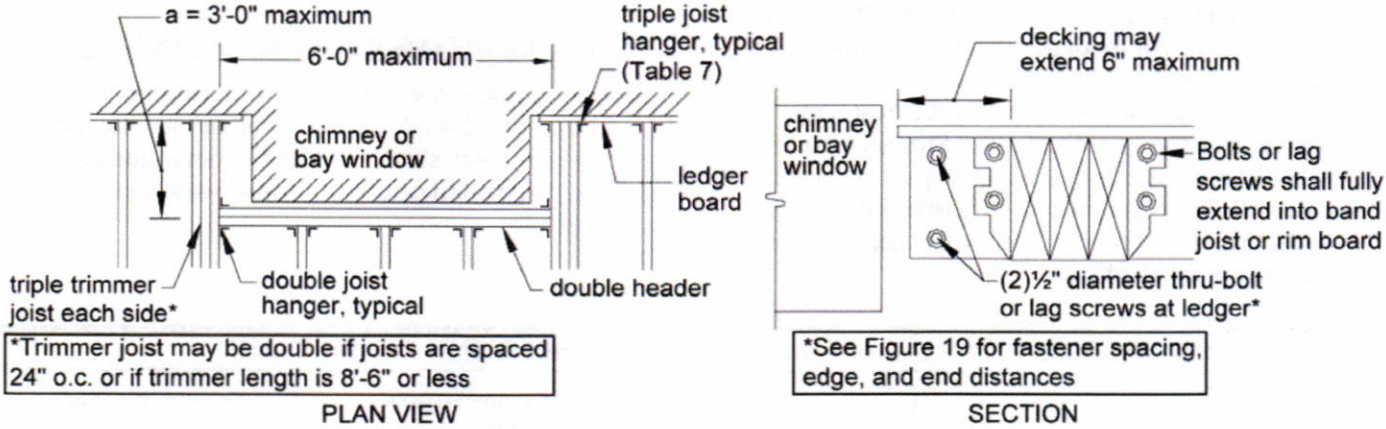

It is intended that this document be used in conjunction with competent design, accurate fabrication, and adequate supervision of construction. While every effort has been made to insure the accuracy of the information presented, the American Wood Council and its members do not assume responsibility for errors or omissions in the document, nor for designs, plans, or construction prepared from it. Those using this document assume all liability arising from its use.

Copyright © 2007, 2009, 2010, 2013
American Wood Council

05-13

Commentary to *Prescriptive Residential Wood Deck Construction Guide DCA 6*

Design for Code Acceptance 6

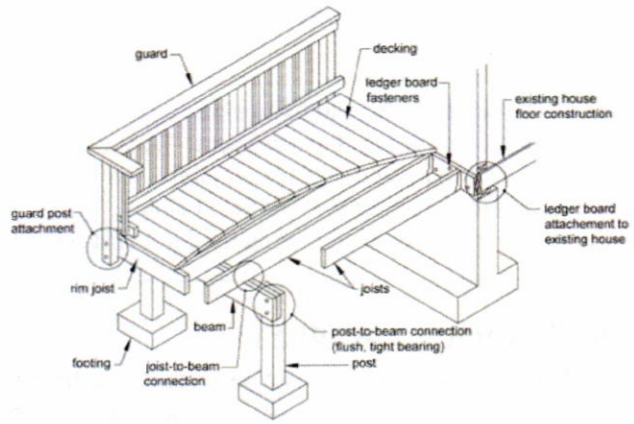

Foreword

This *Commentary* to *DCA 6 – Prescriptive Residential Wood Deck Construction Guide* has been requested by builders, building officials, and others, to provide background information and example calculations for various sections and tables of *DCA 6*.

The *DCA 6 Commentary* follows the same organization as *DCA 6*. Discussion of a particular provision in *DCA 6* is found in the *DCA 6 Commentary* by locating the same section or subsection found in *DCA 6*. Not every section of *DCA 6* has a corresponding commentary section. The *DCA 6 Commentary* provides background information intended to give the reader an understanding of the data and/or experience upon which the provision is based. One or more examples of the calculation procedures used to produce several of the tables are given to illustrate the scope of conditions covered by the table.

The provisions of *DCA 6* come primarily from the International Code Council's *International Residential Code (IRC)*. In developing the *DCA 6 Commentary*, data available from laboratory tests and experience with structures in-service was analyzed and evaluated for the purpose of providing a consistent explanation. It is intended that this document be used in conjunction with competent design, accurate fabrication, and adequate supervision of construction. Therefore, AF&PA does not assume any responsibility for errors or omissions in the *DCA 6 Commentary*, nor for designs or plans prepared from it.

Inquiries, comments, and suggestions from readers of this document are invited.

American Wood Council

Background

In August 2006, the American Forest & Paper Association's American Wood Council (AWC) Technical Committee formed an ad-hoc task group to address prescriptive provisions for residential wood deck construction. Representatives of the wood products industry, home builders, connector manufacturers, building officials, and truss industry were represented on the task group.

The Technical Committee urged the Task Group not to "reinvent the wheel," but to review existing information to determine if there was something on which to build. One resource reviewed was a document developed by the Fairfax County, Virginia Department of Public Works and Environmental Services titled "Typical Deck Details." With Fairfax County's permission, this became the basis for *DCA 6*.

Since Fairfax County's *Typical Deck Details* was developed for a specific geographic location, *DCA 6* was expanded to apply on a national basis (e.g. addition of western lumber species). The first version of *DCA 6* was posted to the AWC website in October 2007.

Copyright © 2013 American Wood Council

Basis
As stated in the boxed text on the cover of *DCA 6*, provisions and details are based on the International Code Council's (ICC) *International Residential Code (IRC)*. The original version of *DCA 6* was based on the *2006 IRC*. Subsequent versions of *DCA 6* incorporated changes based on published supplements (approved code changes) to the *IRC*. The current version of *DCA 6* is based on the *2009 IRC*.

Alternative Methods and Materials
A key point for users is the statement: "This document is not intended to preclude the use of alternative methods and materials." Further, *IRC* R104.11 states: "An alternative material, design or method of construction shall be approved where the building official finds that the proposed design is satisfactory and complies with the intent of the provisions of this code, and that the material, method or work offered is, for the purpose intended, at least the equivalent of that prescribed in this code." While AWC develops design tools and guidelines for wood construction, it is recognized that decks are built with materials other than wood. Many of these materials undergo scrutiny through a code evaluation process such as that promulgated by ICC's Evaluation Services. The result is typically an Evaluation Service Report (ESR) for the product. The building official is typically the authority having jurisdiction and makes the final decision regarding all construction methods and materials.

MINIMUM REQUIREMENTS

1. This document applies to single level residential wood decks only. Multiple level decks will likely have stairs that create additional concentrated loads that are not considered in the joist and beam span tables for *DCA 6*. Non-residential decks or balconies typically require design by a licensed professional.

2. Table 1 does not provide an exhaustive list of preservative treatments and retention levels for ground contact lumber. The American Wood Protection Association (AWPA) is a non-profit organization which is responsible for promulgating voluntary wood preservation standards. AWPA Standards are developed by its technical committees under an ANSI accredited consensus-based process. Note also that many preservative treatments undergo scrutiny through a code evaluation process such as that promulgated by ICC's Evaluation Services. The result is typically an Evaluation Service Report (ESR) for the product.

3. Smooth shank nails are prone to "backing out" of wood due to moisture cycling. Threaded nails include helical (spiral) and annular (ring-shank) nails as defined in *ASTM F 547*. Including the common terms "spiral" and "ring-shank" is important to ensure availability from lumber yards. Reference design values for post frame ring shank nails in accordance with *ASTM F1667* are provided in *DA4: Post Frame Ring Shank Nails* (AF&PA 2007). Tabulated values are calculated in accordance with the *2005 National Design Specification® (NDS®) for Wood Construction* yield limit equations.

4. *NDS* Chapter 11 contains spacing, end, and edge distance requirements for various fasteners, including bolts and lag screws.

5. When subjected to standardized laboratory tests that accelerate the corrosion process, metal connectors and fasteners exposed to the chemicals used in ACQ, Copper Azole, or ACZA exhibit higher rates of corrosion than connectors and fasteners exposed to CCA. Users should rigorously apply recommendations of the chemical manufacturers and the treating industry – to use corrosion resistant fasteners and connectors or zinc coated (galvanized) fasteners and connectors with corrosion protection at least equivalent to that of hot-dip galvanized products. Additional information is available from various sources including: http://www.awc.org/HelpOutreach/faq/Corrosion.html

6. Concentrated loads, such as those created by hot tubs and planters, are beyond the scope of *DCA 6*.

7. Structural members and connections shown in *DCA 6* have been sized based primarily on a uniformly distributed floor live load of 40 psf and a dead load of 10 psf (table footnotes specify where other point loads have been considered). If a deck is not prone to sliding or drifting snow, the criteria in *DCA 6* can be conservatively applied to a deck with a uniformly distributed snow load of 40 psf and a 10 psf dead load.

The *IRC* provides guidance on applicability of provisions of the *IRC* for high wind and seismic regions as follows:

"**R301.2.1.1 Design criteria**. Construction in regions where the basic wind speeds from Figure R301.2(4) equal or exceed 100 miles per hour in hurricane-prone regions, or 110 miles per hour elsewhere, shall be designed in accordance with one of the following:..." Several alternate methodologies are subsequently listed. This indicates that provisions of the *IRC* are applicable in hurricane regions less than 100 mph and less than 110 mph elsewhere.

"**R301.2.2 Seismic provisions.** The seismic provisions of this code shall apply to buildings constructed in Seismic Design Categories C, D_0, D_1 and D_2, as determined in accordance with this section…

Exception: Detached one- and two-family dwellings located in Seismic Design Category C are exempt from the seismic requirements of this code."

8. *IRC* R703.8(5) requires attachment of flashing "…Where exterior porches, decks, or stairs attach to a wall or floor assembly of wood-frame construction." Aluminum flashing should not be used if it will be in contact with treated lumber. Lumber treated with preservatives such as alkaline copper quat (ACQ), copper azole (CA), or ammoniacal copper zinc arsenate (ACZA) all contain copper. As a result, they will corrode aluminum flashing as well as ferrous metals.

9. *IRC* R110.1 Use and occupancy states: "No building or structure shall be used or occupied…until the building official has issued a certificate of occupancy…"

10. See Commentary for **Alternative Methods and Materials**.

DECKING REQUIREMENTS

The American Lumber Standard Committee (ALSC) *Policy for Evaluation of Recommended Spans for Span Rated Decking Products* (ALSC Decking Policy) provides a uniform method for assessing span rated decking products which are produced from many different species of wood, and graded under several different grading standards. This ALSC policy covers specific products classified by size as decking and are assigned a recommended span of usually 16" or 24". This policy is not intended to be used for the assessment or approval of decking spans in excess of 24". The range of current grading rule specifications and species requires the establishment of a uniform common analytical procedure for assessing the appropriateness of these products relative to the recommended spans. This ALSC policy establishes this uniform analytical procedure.

The analysis for maximum span rating assumes the following design conditions:

1. Span – Two-span continuous with load applied to only one span.
2. Seasoning – Green use condition (Moisture Content >19%), assumed to be 23% MC or greater.
3. Deflection Limit – Deflection under design loads using calculated average allowable modulus of elasticity shall not exceed L/180.

Load Conditions – Allowable span analysis includes the following two load conditions with load applied on one span of a two-span continuous beam:

a. Uniform Load – the calculated maximum allowable fiber stress in bending derived from *ASTM D2555* and *D245*, or the In-grade test procedures of Annex 1 (of ALSC Decking Policy) equals or exceeds the stress induced by a 70 psf uniform load on the recommended span. The analysis assumes normal load duration.

b. Point Load – the calculated maximum allowable fiber stress in bending derived from *ASTM D2555* and *D245*, or the In-grade test procedures of Annex 1 (of ALSC Decking Policy) equals or exceeds the stress induced by a 220 lb. point load applied at the midpoint of the recommended span. The analysis assumes 7-day load duration.

See Commentary for **Alternative Methods and Materials** for decking materials not covered by the ALSC policy

JOIST SIZE

Joist spans are based on lumber size and joist spacing. The span of a joist is measured from the centerline of bearing at one end of the joist to the centerline of bearing at the other end of the joist and does not include the length of the overhangs. Joist spans are limited to a maximum of 18'-0" to ensure appropriate design of beams and footings. If longer joist spans are designed, joist hangers, beams, posts, and footings will have to be analyzed to ensure appropriate load path. See span calculator at www.awc.org for simple span conditions without overhangs, however spans shall not exceed 18'-0" when used in conjunction with *DCA 6*.

For simple span applications without overhangs and uniformly distributed loads, maximum joist spans are as shown in Table 2. Span calculations in Table 2 assume a 40 psf live load, 10 psf dead load, L/360 deflection limit, No. 2 grade, and wet service conditions.

Span calculations in Table 2 for joists with overhangs (cantilevers), in addition to the 40 psf live load and 10 psf dead load, assume L/180 cantilever deflection with a 220 lb point load (same as used for span rated decking), No. 2 grade, and wet service conditions. The 220 pound point load controlled in certain cases such as 2x8 and 2x10 at 12" and 16" o.c. – which is why the spans are the same (see Table C2). Deflection controlled for almost all 12" o.c. spacings and most 16" o.c. spacings.

Joist spans can extend (overhang) past the joist bearing centerline up to $L_J/4$ as shown in Figure 1A and Figure 2, or the joists may attach to the side of the beam with joist hangers as shown in Figure 1B (however, joists shall not be attached to opposite sides of the same beam). Allowing joists to span from opposite sides of the beam without appropriate consideration could potentially lead to a condition where beam capacity is exceeded.

Incising factors are used for refractory species including Douglas fir-larch, hem-fir, and spruce-pine-fir. Hem-fir spans control for these three species combinations. Northern species design values are used for Ponderosa pine and red pine with no incising assumed. These species are combined with redwood and western cedar since incising is not necessary for naturally durable wood (heartwood of the following species: decay-resistant redwood and cedars - corner sapwood is permitted if 90 percent or more of the width of each side on which it occurs is heartwood), therefore design values are comparable. Northern species design values control spans for these four species combinations.

Table C2. Areas Where Point Load Controls Maximum Joist Spans with Overhangs*.

Species	Size	With Overhangs up to $L_J/4$[2] 12"	16"	24"
Southern Pine	2x8	10' - 9"	10' - 9"	10' - 2"
	2x10	15' - 6"	15' - 6"	13' - 1"
	2x12	18' - 0"	18' - 0"	15' - 5"
Douglas Fir-Larch, Hem-Fir, SPF[3]	2x8	9' - 5"	9' - 5"	9' - 1"
	2x10	13' - 7"	13' - 7"	11' - 1"
	2x12	18' - 0"	15' - 9"	12' -10"
Redwood, Western Cedars, Ponderosa Pine[4], Red Pine[4]	2x8	8' - 6"	8' - 6"	8' - 6"
	2x10	12' - 3"	12' - 3"	10' - 7"
	2x12	16' - 5"	15' - 1"	12' - 4"

220 lb point load controls

*See Table 2 for footnotes.

BEAM SIZE & ASSEMBLY REQUIREMENTS

Deck beam spans are in accordance with Table 3 and can extend past the post centerline up to $L_B/4$ as shown in Figure 3. Beams are sized based on tributary load from joists within the span limits shown in Table 2. Joists are assumed to span from one side only. Allowing joists to span from opposite sides of the beam without appropriate consideration could potentially lead to a condition where beam capacity is exceeded.

With appropriate assumptions, Table 3 could be used to size beams with joists spanning from both sides. Since tabulated values for beams assume ½ of the joist span to calculate tributary area, using 2x the joist span for cases where joists span symmetrically (equal joist spans) from opposite sides is acceptable. For example, assume there are 8'-0" joists spanning from opposite sides of the same beam. The column in Table 3 labeled for 16'-0" joist spans can be used to size a beam in this case.

Refractory species and naturally durable species are combined because of the incising factor. Even though design values for naturally durable species are lower than those of the refractory species, the incising factors applied to strength and stiffness values of refractory species offset the differences. Therefore, span differences are minimal. Northern species design values control spans for these species combinations.

DECK FRAMING PLAN

A framing plan shows the layout of the primary structural system. Examples of structural elements include: joists, beams, ledger board, posts, footings, stringers, treads, and the type, size, and spacing of ledger board fasteners. Figure C5 shows an example of a typical deck framing plan.

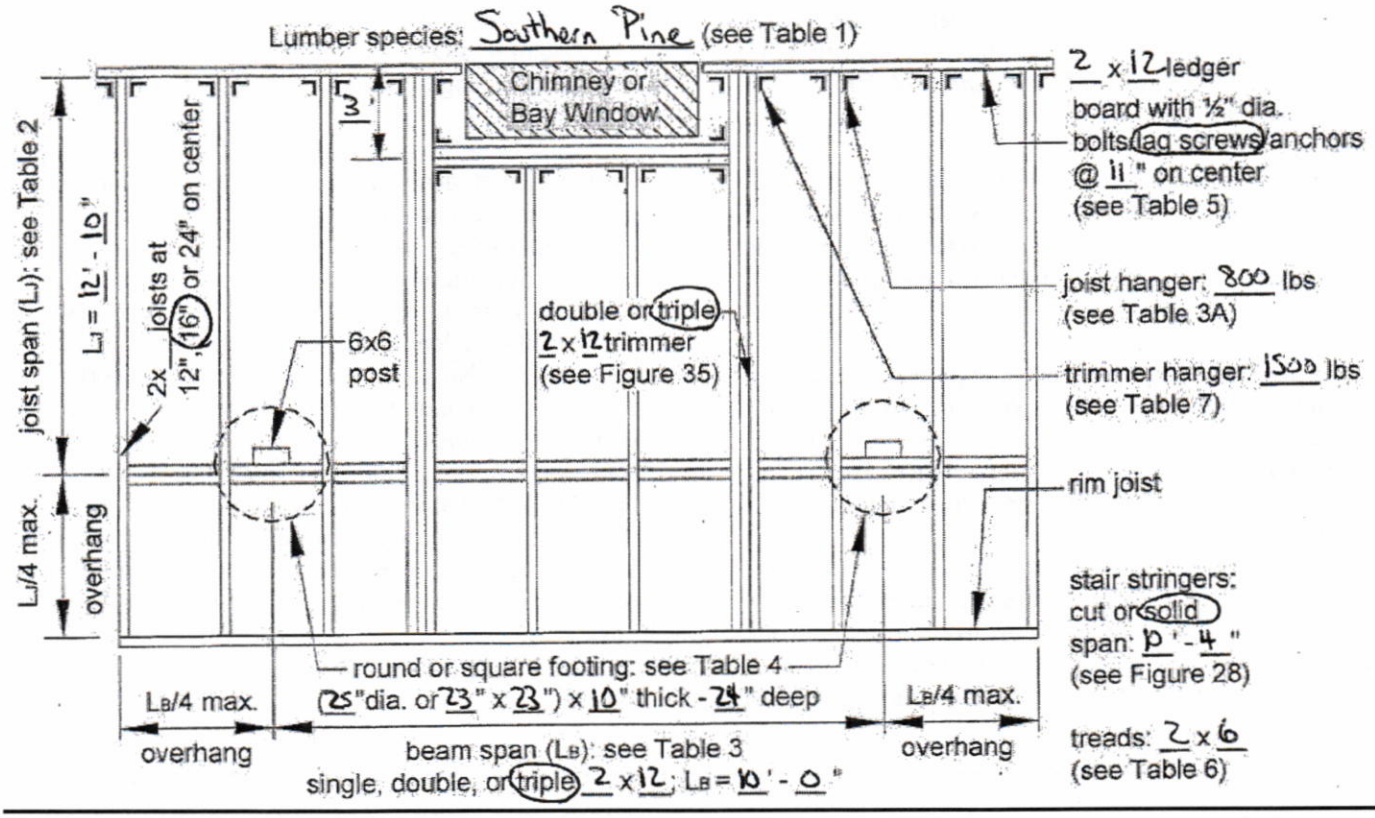

Figure C5. Example of Typical Deck Framing Plan

JOIST-TO-BEAM CONNECTION

Joist-to-beam connections must be installed to handle forces in several directions. Options 1 and 2 handle gravity loads through bearing of the joist to the beam, while Option 3 requires nails to resist these downward loads. All three options have been evaluated to ensure that an uplift load created by a 220 lb point load at the end of a cantilevered joist will be resisted.

Manufacturers regard connectors with missing nails as mis-installations and do not recommend they be installed as such.

JOIST HANGERS

The loads listed in the Table 3A are derived from the worst case condition for each joist size based on Table 2 (508 lbs, 654 lbs, and 771 lbs for southern pine at 24" o.c. for 2x8, 2x10, and 2x12, respectively). For simple span applications without overhangs, as shown in Table 2, note that spans are identical to those shown in Table 2 with overhangs for southern pine joists at 24" o.c., therefore the same joist hanger capacities as shown in Table 3A will work for spans with or without overhangs.

POST REQUIREMENTS

IRC section R407.3 specifies a minimum 4x4 (nominal) wood column size. Requiring a minimum 6x6 post in *DCA 6* is conservative for most deck applications. Further, this simplification allows a deck height of up to 14' and provides adequate bearing for beams. Note that notching of the post to accommodate a nominal 3x, 4x, or 2-ply 2x beam exceeds limits for bending members, so for lateral load conditions, the post would need to be designed per the *National Design Specification® (NDS®) for Wood Construction*.

Prohibiting attachment of the beam to the sides of the post with fasteners only (Figure 9) ensures wood-to-wood bearing and avoids potential issues that could arise from using inappropriate (non-corrosion resistant) fasteners.

For 3-ply 2x beams, a post cap is required since the remaining cross section at the post notch would not be sufficient to provide adequate connection of the beam to the column. The connector shown in Figure 10 is readily available with extra corrosion protection and offers uplift and lateral load resistance.

Provisions for **Alternative Methods and Materials** allow for other post sizes and post-to-beam connections if approved by the building official. For example, in order to use a 4x4 post, it would require the use of a post cap connection as shown in Figure 10. There is not enough cross sectional area in a 4x4 to permit the let-in notch detail as shown in Figure 8. Connector hardware for a 4x4 post is generally limited to 2-ply nominal 2 inch beams or 4 inch nominal beams. Certain post caps may be adjusted to fit a 3-ply 2 inch nominal member onto a 4x4 post, but must be special ordered and manufactured manually. Contact a connector manufacturer to determine if there are solutions for connecting a single 3x nominal member onto a 4x4 post.

Assuming that identical species will be used for joists and beams, an analysis of Table 3 reveals that a maximum tributary area of approximately 81 ft^2 will result if southern pine is used (see calculations under FOOTINGS for L_J = 18'-0" and L_B = 8'-0" for 2-2x12). This results in a load on the post of 4,061 lbs. A 4x4 southern pine No. 2 post 10' in height would work in this situation (assuming pinned end fixity). Similarly, for other Table 3 species, assuming joists and beams are the same species, a maximum post load of 3,717 lbs is calculated. A 4x4 No. 2 post 8' in height will work in this case (western cedar controls). If different species are used for joists than are used for beams, an analysis is required to determine the maximum tributary area on the post.

FOOTINGS

Footing sizes are based on the assumptions of 1,500 psf soil bearing capacity and 2,500 psi compressive strength of concrete which are the minimum values based on *IRC* Tables R401.4.1 and R402.2. The following equations are used to size footings (see Figure C12):

Post load (lbs): $R = 50\left(\frac{L_J}{2} + \frac{L_J}{4}\right)\left(\frac{L_B}{2} + \frac{L_B}{4}\right)$

where: L_J and L_B units are in feet.

Square footing (in.): $B = 12\sqrt{\frac{R}{1500}}$

Round footing (in.): $D = 12\sqrt{\frac{4R}{1500\pi}}$

Footing thickness (in.): $T \geq P$; $T \geq \frac{D - 5.5}{2}$

Figure C12. Footing dimensions and variables

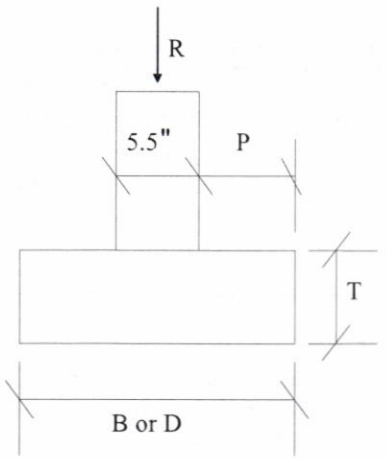

Table C4 shows additional footing diameters and thicknesses for joist spans not shown in Table 4.

Coordinating the footing thickness with post base and anchor requirements means ensuring that post anchor length does not exceed the thickness of the footing.

Table C4 Footing Sizes[1]

Beam Span L_B	Joist Span L_J	Round Footing Diameter	Square Footing Diameter	Footing Thickness[2]
6'	≤8'	13"	11"	6"
	≤12'	16"	14"	6"
	≤16'	19"	17"	7"
8'	≤8'	15"	13"	6"
	≤12'	19"	17"	7"
	≤16'	21"	19"	8"
10'	≤8'	17"	15"	6"
	≤12'	21"	19"	8"
	≤16'	24"	22"	9"
12'	≤8'	19"	17"	7"
	≤12'	23"	21"	9"
	≤16'	26"	24"	11"
14'	≤8'	20"	18"	8"
	≤12'	24"	22"	10"
	≤16'	28"	26"	12"
16'	≤8'	21"	19"	8"
	≤12'	26"	24"	11"
	≤16'	30"	28"	13"
18'	≤8'	23"	21"	9"
	≤12'	28"	26"	11"
	≤16'	32"	30"	13"

1. Assumes 1,500 psf soil bearing capacity.
2. Assumes 2,500 psi compressive strength of concrete. Coordinate footing thickness with post base and anchor requirements.

LEDGER ATTACHMENT REQUIREMENTS

Fastener spacing requirements in Table 5 are based on *2009 IRC* R502.2.2.1, which is based on testing at Virginia Tech and Washington State University (Carradine et al., 2006). Testing was conducted for three common deck ledger constructions using ½" diameter lag screws and bolts. In the tests, two types of band joist materials were used: 2x10 spruce-pine-fir (SPF) lumber and 1-inch-thick Douglas-fir (DF) laminated veneer lumber (LVL) rim board. SPF has a relatively low specific gravity of G = 0.42, so other denser species groupings (e.g., hem-fir, Douglas-fir-larch, and southern pine) can be conservatively substituted. Similarly, the 1"-thick rim board is the minimum thickness that is currently sold in the marketplace. Thicker composite rim board products with equivalent specific gravities of 0.50 or greater (such as southern pine) can be conservatively substituted for the LVL band joist material tested.

According to *IRC* R311.3.1, the distance from the top of the threshold to the top of deck boards cannot exceed 1-½". If a door does not swing over the landing or deck, the step-down can be up to 7-¾". The ledger can be lowered for improved drainage, subject to meeting maximum step-down heights for accessibility and means of egress, edge distance and spacing requirements, and shear design at connection requirements of NDS 3.4.3.3(a).

The basis for edge distances and spacing between rows (Figure 19) is *NDS* Tables 11.5.1A and 11.5.1D, respectively, for perpendicular to grain conditions. Per *NDS* Table 11.5.1A, edge distance is 4D (where D is fastener diameter) for the loaded edge. For ½" diameter bolts, 4D = 2" edge distance.

Per *NDS* Table 11.5.1D, spacing between rows is based on the ℓ/d ratio of the fastener. For a 1-½" ledger and rim board, ℓ/d = 1-½" / ½" = 3 and the minimum spacing is $(5\ell + 10D) / 8$ = 1-$^{9}/_{16}$" – this is rounded up to 1-$^{5}/_{8}$". Per footnote 2 of *NDS* Table 11.5.1D, the maximum spacing between fasteners is 5". This requirement is based on potential shrinkage of the ledger which could create tension perpendicular to grain stresses if the outer edges of the ledger are constrained by bolts.

The requirement for minimum distance between the top of the ledger and the bottom row of fasteners (Figure 19) is based on NDS 3.4.3.3(a) for shear design at connections. When the connection is less than five times the depth, 5d, of the bending member from its end, the adjusted design shear is calculated as follows:

$$V_r' = \left[\frac{2}{3}F_v' b d_e\right]\left[\frac{d_e}{d}\right]^2$$

Solving for d_e yields the following:

$$d_e^3 = 3\ V_r d^2 / (2\ F'_v b)$$

Assuming a hem-fir No. 2 ledger, the reference horizontal shear design value, $F_v = 150$ psi. The adjusted shear design value, F'_v, is based on a wet service factor, $C_M = 0.97$, and incising factor, $C_i = 0.80$. The maximum allowable lateral design value of 725 lbs for ½" bolts and 385 lbs for ½" lag screws - is based on testing at Virginia Tech and Washington State University (Carradine et al., 2006). Spacing calculations assume that bolts or lag screws at the end of the ledger have half the tributary area of interior bolts or lag screws and that the shear at interior bolts or lag screws is half of the interior bolt or lag screw reaction. Therefore, the minimum value of d_e is calculated assuming V_r equals one-half of the allowable lateral design value for the ½" bolts (725/2 lbs) or ½" lag screws (385/2 lbs). Resulting values of d_e are as follows:

	½" bolts	½" lags
2x8	d_e = 5.47"	d_e = 4.43"
2x10	d_e = 6.43"	d_e = 5.21"
2x12	d_e = 7.33"	d_e = 5.9"

The problem with these effective depths is that a 2x8 ledger connected to a 2x8 band joist with bolts will not work (see Figure C19).

Possible solutions for the 2x8 band joist include:

1) Free standing deck.
2) Step-down the deck 7-¾" from the threshold per *IRC* requirements and connect to the wall below. Note that this solution is prohibited if the wall is for a walk-out basement.
3) Require lag screws for 2x8 band joist and revise required d_e = 4.5" as shown in Figure 19.
4) Allow bolted connections for 2x8 band joist if bolt spacing is reduced to the same as that for lag screws (only applies to ½" bolts without stacked washers as shown in Table C5) as shown in Figure 19.
5) Reduce bolt spacing requirements for 2x8 ledger to 2x8 band joist. When d_e = 4.5", V_r = 202 lbs, and the back-calculated adjustment factor is 0.56. Based on Table 2, the maximum joist span for a 2x8 is 10'-6". This results in revised spacing for ½" bolts as shown in Table C5.

Table C5. Revised Bolt Spacing Requirements for 2x8 Ledgers to 2x8 Band Joists.

	Joist Span			
	6'-0" & less	6'-1" to 8'-0"	8'-1" to 10'-0"	10'-1" to 12'-0"
½" bolt	32"	24"	19"	16"
½" bolt with ½" stacked washers	27"	20"	16"	13"

Continuous flashing is required as shown in Figure 14 to prevent water intrusion behind the ledger. One alternative to this detail would be continuous flashing with a drip edge, however, this would be labor intensive because the flashing would require notching at every deck joist location.

Connection of ledgers to empty hollow masonry cell blocks (Figure 16) of existing construction is generally not practical because most manufacturers of concrete block anchors do not published allowable shear values for a ledger connected to a hollow masonry block of unknown compression strength and wall thickness at the point of attachment. Due to the uncertainty and lack of test data for this application, a free standing deck is recommended (see Figures 21 and 22).

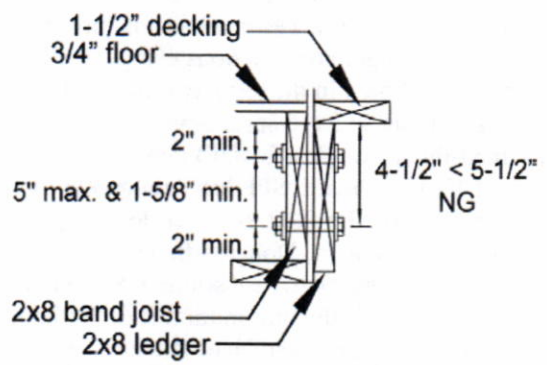

Figure C19. Edge Distance and Spacing Requirements for 2x8 Band Joist and 2x8 Ledger.

DECK STABILITY

The requirement for diagonal bracing when a deck is greater than 2 feet above grade is applicable to both free-standing decks and decks supported by a ledger.

If the deck is attached to the house as shown in Figures 14, 15, 16, or 23, an alternative to knee braces for deck stability (Figure 22) is installation of decking at a 45 degree angle to the deck joists. Decks are stiffer laterally with diagonally oriented lumber decking versus decking installed perpendicular to joists.

With respect to hold down tension devices, *IRC* R502.2.2 requires anchorage to the primary structure for both vertical and lateral loads as applicable. Further, the *IRC* includes hold down tension devices as a prescriptive means to achieve compliance with the lateral load connection requirements without requiring engineering. Figure 23A was taken directly from the FEMA *Home Builder's Guide to Seismic Resistant Construction* (FEMA 232) which refers to it as an "above-code recommendation." In lieu of the prescriptive hold down tension device specified, an alternate engineered connection detail is permitted or the deck can be designed to be free-standing.

While Item 7 of *DCA 6* Minimum Requirements states that the document does not address wind or seismic design issues, some interpret R502.2.2 to be applicable in all cases since lateral loads can be developed by other sources including people moving or dancing on a deck. Another interpretation is that the term "as applicable" in R502.2.2 means the provision is only required for code prescribed loads. The only code prescribed lateral loads are wind and seismic.

Where deck joists are perpendicular to the house floor joists, blocking between house joists and boundary nailing of the house floor diaphragm to the blocking is required.

GUARD REQUIREMENTS

Figure 24 requires that openings not allow the passage of a 4" diameter sphere. However, it does not address openings underneath a fixed deck bench used in place of guards. All openings, including those underneath benches used in place of guards, shall not allow the passage of a 4" diameter sphere.

Additionally, if fixed seating is adjacent to guards, the guard height should be measured from the seat rather than the deck surface. This will help minimize exposure to falls over the top of the guard due to individuals standing on deck seats.

IRC Table R301.5 requires guard in-fill components (all those except the handrail), balusters, and panel fillers to be designed to withstand a horizontally applied normal load of 50 pounds on an area equal to 1 square foot. This load need not be assumed to act concurrently with any other live load requirement. Baluster connection requirements shown in Figure 24 have been designed to resist that load.

GUARD POST ATTACHMENTS

Both the *IRC* and *International Building Code (IBC)* specify that guardrails and handrails be capable of resisting a minimum concentrated live load of 200 lbs applied in any direction. Commonly used residential guardrail post connections were laboratory tested at the required load level for a code-conforming assembly per the *IBC* (Loferski et al., 2006). A commercially available connector, typically used in shear wall construction, was tested in a post-to-deck residential guardrail assembly. The connection passed a load test based on code provisions for a "tested assembly." Connection details in Figures 25 and 26 reflect these test results.

A minimum requirement of 1,800 lbs for the hold down connector ensures adequate capacity (Loferski et al., 2005) for a 36" maximum rail height. A higher rail height requires design of a higher capacity connector. Manufacturers' tabulated values for hold down connectors typically include a load duration (C_D) increase of 60% since connectors for shear walls are used to resist wind and seismic loads. The 200 lbs concentrated load requirement for guard rails is assumed to be a 10 minute load duration (e.g. it would not see a maximum 200 lbs outward load for more than 10 minutes cumulatively in its lifetime). Therefore, C_D=1.6 is used for hold downs in this application.

This section requires deck guard posts to be at least 4x4 nominal with a reference bending design value not less than 1,100 psi to ensure sufficient bending stress in the post. Assuming the lever arm is 39.5" (36" + 1.5" deck board + 2" edge distance), the bending moment is 39.5" x 200 lbs = 7,900 in-lbs. Bending stress, f_b, is calculated as follows:

$M/S_{(4x4)}$ = 7,900 in-lbs / 7.146 in^3 = 1,106 psi.

No. 2 grades of all Table 2 species meet this requirement with the following assumptions. The adjusted bending design value, F'_b, is based on a wet service factor, C_M = 0.85, and incising factor, C_i = 0.80 (Douglas fir-larch, hem-fir, spruce-pine-fir). A load duration factor, C_D = 1.6, is assumed for consistency with the hold down device used to connect the guard to the joist.

Figures 25 and 26 show minimum and maximum spacing requirements for bolts in deck joists and deck rim boards. The 5" maximum spacing is per footnote 2 of *NDS* Table 11.5.1D. This requirement is based on potential shrinkage of the joist or rim board which could create tension perpendicular to grain stresses if the outer edges of the deck joist or rim are constrained by bolts.

STAIR REQUIREMENTS

Figure 29 shows 5/4 boards spanning 18" or less. As noted under DECKING REQUIREMENTS commentary, specific products classified by size as decking are usually assigned a recommended span of 16" or 24".

Additionally, *IRC* Table R301.5 footnote (c) requires a 300 lb concentrated load check on stair treads. Analysis revealed that 2x6 No. 2 southern pine works for a 34.5" span (36" – ¾" bearing at each end) when the 300 lbs is distributed across 2 inches (e.g. 150 pli). This is based on L/288 deflection criteria (ICC ES Acceptance Criteria 174 requires $^1/_8$" deflection limit: 36"/0.125" = 288). Other species will not calculate for that span using 2x6.

Solid stringers were analyzed as simple span beams using the horizontal span not the actual stringer length. Cut stringers were analyzed with 5.1" depth which is based on 7.75:10 rise to run ratio. A size factor, C_F, of 1.0 is used since 2x12 is the size basis.

STAIR FOOTING REQUIREMENTS

Stair stringers should be supported by bearing at the end where the stairway meets grade. The detail shown assumes a 40 psf live load and 10 psf dead load over a tributary area of 18" and one-half of the maximum span permitted for solid stringers (16'-6" for southern pine and 13'-3" for other species). This calculates to 625 lbs and 500 lbs, respectively. For southern pine, seven #8 wood screws would be required. Northern species would require eight #8 wood screws (16d box or common nails would be comparable).

While bolts are sometimes used for this detail, proximity to the end of the stringer could lead to splitting of the stringer – especially cut stringers. The 2x4 bearing block alleviates this situation. However, in addition to the bearing block, bolts would also be required to provide lateral support if a guard post is used.

FRAMING AT CHIMNEY OR BAY WINDOW

IRC R502.10 on framing of openings states: "Openings in floor framing shall be framed with a header and trimmer joists. When the header joist span does not exceed 4', the header joist may be a single member the same size as the floor joist. Single trimmer joists may be used to carry a single header joist that is located within 3' of the trimmer joist bearing. When the header joist span exceeds 4', the trimmer joists and the header joist shall be doubled and of sufficient cross section to support the floor joists framing into the header. Approved hangers shall be used for the header joist to trimmer joist connections when the header joist span exceeds 6'..."

Trimmer Joist Size and Span Limited by Concentrated Load from the Header

Where the header frames into the trimmer joist, a concentrated load is created. This condition was evaluated assuming one ply of a double trimmer joist carries the uniform load and one ply carries the point load from a 6' header. The analysis revealed that the distance from the end of the trimmer joist to the point where the header frames into it – designated as dimension "a" – must be limited. The maximum distance was calculated based on joist spans given in Table 2. A maximum distance of a = 3' was chosen to cover common framing conditions. Triple trimmer joists are required on each side of the header if joist spacing is 12" or 16" o.c., or if the trimmer joist span exceeds 8'-6"; otherwise a double trimmer joist is permitted. If "a" is less than that shown in Table C7a, a double trimmer joist is also permitted.

Bending and shear were checked to determine the reduction in a double trimmer joist span when carrying a 6' header. For a simple span beam, with a concentrated load offset from the center, maximum moment is calculated as Pab/L_J and maximum shear is calculated as Pb/L_J, where P is the concentrated load based on the tributary area carried by the header, $b = L_J - a$, and L_J is the trimmer joist span.

Moment controlled for this analysis in determining a_{max}. While shear was evaluated, the *NDS* permits the shear load to be reduced within a distance "d" (equal to the joist depth) from the end of the joist. With that reduction, shear did not control any of the spans evaluated.

Table C7a. Maximum Distance "a" from Trimmer Joist End to a Point where a 6' Header Frames into a 2-ply Trimmer Joist.

Species	Trimmer Size	a_{max}
Southern Pine	2-2x8	18"
	2-2x10	24"
	2-2x12	29"
Douglas Fir-Larch, Hem-Fir, SPF[1]	2-2x8	14"
	2-2x10	16"
	2-2x12	19"
Redwood, Western Cedars, Ponderosa Pine[2], Red Pine[2]	2-2x8	14"
	2-2x10	16"
	2-2x12	18"

1. Incising assumed for refractory species including Douglas fir-larch, hem-fir, and spruce-pine-fir.
2. Design values based on northern species with no incising assumed.

The trimmer hanger capacities listed in Table 7 are based on southern pine joist spans at 12" o.c. or 16" o.c. spacing (whichever controls). The reaction is a combination of the concentrated header load Pb/L_J and the tributary uniform load between the trimmer and the next adjacent joist. Another way of tabulating trimmer hanger capacities is shown in Table C7c based on trimmer spans. Linear interpolation of tabulated values is permitted.

Trimmer Joist Span Limited by Concentrated Load on the Ledger

Bolts or lag screws used to attach the trimmer hanger to the ledger are required to fully extend through the ledger into the band joist or rim board. If a typical face mounted hanger is installed where only nails are used to attach the hanger to the ledger, the ledger would carry a large portion of the load. Since a concentrated load would be created on the ledger, it would be resisted by the bolts at the end of the ledger. As discussed under **LEDGER ATTACHMENT REQUIREMENTS**, the provisions for minimum distance, d_e, between the top of the ledger and the bottom row of fasteners (Figure 19) is based on *NDS* 3.4.3.3(a) for shear design at connections. Based on this analysis, trimmer joist lengths would need to be limited to the maximum trimmer joist spans shown in Table C7b, regardless of the trimmer joist species or number of plies. Since this analysis is based on a simple span trimmer joist, a trimmer joist with an overhang of up to $L_J/4$ would be conservative. The load on the end of the cantilever would reduce the reaction at the ledger.

Table C7b. Maximum Trimmer Joist Span (L_J) Based on Distance "a" from the Trimmer Joist End to the Point where the Header Frames into the Trimmer.[1,4]

Ledger Species	Size	a = 1'	a = 2'	a = 3'
Southern Pine	2x8	5' - 9"	7' - 5"	8' - 11"
	2x10	9' - 2"	10' - 11"	12' - 7"
	2x12	9' - 5"	11' - 2"	12' - 10"
Douglas Fir-Larch, Hem-Fir, Spruce-Pine-Fir[2]	2x8	4' - 6"	6' - 0"	7' - 6"
	2x10	6' - 10"	8' - 6"	10' - 1"
	2x12	7' - 0"	8' - 9"	10' - 4"
Ponderosa Pine[3], Red Pine[3], Redwood, Western Cedar	2x8	4' - 3"	5' - 9"	7' - 3"
	2x10	6' - 5"	8' - 1"	9' - 8"
	2x12	6' - 7"	8' - 3"	9' - 10"

1. Assumes 6' header span. See Figure 35 for header, trimmer, and ledger framing details.
2. Incising assumed for refractory species including Douglas fir-larch, hem-fir, and spruce-pine-fir.
3. Design values based on northern species with no incising assumed.
4. Shading indicates where triple trimmers are required. See text for alternate 2-ply trimmer conditions.

Table C7c. Trimmer Joist Hanger Download Capacity Based on Trimmer Span.

Trimmer Span	Minimum Capacity, lbs
8'	660
10'	860
12'	1060
14'	1260
16'	1460
18'	1500

Examples

1) Assume a 2x10 redwood joist spanning 12'-0" at 16" o.c. (per Table 2) framing around a 5' wide by 2.5' deep chimney. Set a 6' header 3' from the end of the trimmer joist. A triple trimmer joist is required since the span exceeds 8'-6". If the trimmer hanger does not attach through the ledger to the rim board or band joist, the trimmer joist span is limited to 9'-8" per Table C7b. Several solutions exist:

- Reduce all joist spans to 9'-8".
- $L_J/4$ = 2'-5" so $L_J + L_J/4$ = 12'-1" total joist length, which would provide the same square footage.
- Place a post under the center of the header to reduce the header span.

2) Assume a 2x8 western cedar joist spanning 8'-0" at 24" o.c. (per Table 2) framing around a 5' wide by 1.5' deep bay window. Set a 6' header 2' from the end of the trimmer joist. A double trimmer joist is permitted since the spacing is 24" o.c. If the trimmer hanger does not attach through the ledger to the rim board or band joist, the trimmer joist span is limited to 5'-9" per Table C7b. Several solutions exist:

- Reduce all joist spans to 5'-9".
- Place a post under the center of the header to reduce the header span.
- Increase joist size to 2x10 which will span 8'-1" per Table C7b.

3) Assume a 2x12 southern pine joist spanning 18'-0" at 16" o.c. (per Table 2) framing around a 5' wide by 1.5' deep bay window. Set a 6' header 2' from the end of the trimmer joist. A double trimmer joist is permitted since a = 24" which is less than a_{max} = 29" in Table C7a. However, if the trimmer hanger does not attach through the ledger to the rim board or band joist, the trimmer joist span is limited to 11'-2" per Table C7b. Several solutions exist:

- Reduce all joist spans to 11'-2".
- Place a post under the center of the header to reduce the header span.

References

American Lumber Standard Committee (ALSC) *Policy for Evaluation of Recommended Spans for Span Rated Decking Products (November 5, 2004)*. Germantown, MD. 2004.

American Forest & Paper Association. *DA4: Post Frame Ring Shank Nails*. Washington, DC. 2007.

American Forest & Paper Association. *National Design Specification (NDS) for Wood Construction, ANSI/AF&PA NDS-2005*. Washington, DC. 2005.

American Wood Protection Association (AWPA). *AWPA Book of Standards*. Birmingham, AL. 2008.

ASTM. *ASTM F547 - 06 Standard Terminology of Nails for Use with Wood and Wood-Base Materials*. West Conshohocken, PA. 2006.

ASTM. *ASTM D2555 - 06 Standard Practice for Establishing Clear Wood Strength Values*. West Conshohocken, PA. 2006.

ASTM. *ASTM D245 – 06 Standard Practice for Establishing Structural Grades and Related Allowable Properties for Visually Graded Lumber*. West Conshohocken, PA. 2006.

Carradine, D. M., Donald Bender, Joseph R. Loferski, and Frank E. Woeste. "Residential Deck Ledger Connection Testing and Design." *Wood Design Focus*. Vol. 16, No. 2. Forest Products Society. Madison, WI. Summer 2006.

International Code Council Evaluation Service. *Acceptance Criteria for Deck Board Span Ratings and Guardrail Systems (Guards and Handrails) - AC174*. Washington, DC. Approved February 2007, Effective March 1, 2007.

International Code Council. *International Building Code, 2009 Edition*. Washington, DC. 2009.

International Code Council. *International Residential Code, 2009 Edition*. Washington, DC. 2009.

Loferski, Joseph R., Dustin Albright, and Frank E. Woeste. "Tested Guardrail Post Connections for Residential Decks." *Wood Design Focus*. Vol. 16, No. 2. Forest Products Society. Madison, WI. Summer 2006.

Loferski, Joseph R. and Frank E. Woeste. "Strong Rail-Post Connections for Wooden Decks." *Journal of Light Construction*. Williston, VT. February 2005.

APPENDIX

SAFETY GLAZING REQUIREMENTS: *IRC* R308.4 states that safety glazing in window glass is required when the existing house wall acts as a barrier to adjacent stairs, landings, and areas at the top and bottom of stairs. If a window or portion thereof falls within the area shown in Figure A1, glass panes within that area should be safety glazed. Safety glazing should reduce injury due to accidental impact when ascending or descending stairs. Application of safety glazing film to glass that was not originally treated is acceptable to meet this requirement.

Exceptions to this requirement include:

- When a protective bar is installed on the accessible side(s) of the glazing 36" ± 2" above the deck surface. The bar shall be capable of withstanding a horizontal load of 50 plf without contacting the glass and be a minimum of 1-½" in height.
- The side of a stairway, landing, or ramp has a guardrail or handrail, including balusters or in-fill panels, complying with the provisions of Sections R311.7.6 and R312 and the plane of the glass is more than 18" from the railing.
- When a solid wall or panel extends from the plane of the adjacent walking surface to 34" - 36" above the floor and the construction at the top of that wall or panel is capable of withstanding the same horizontal load as the protective bar.

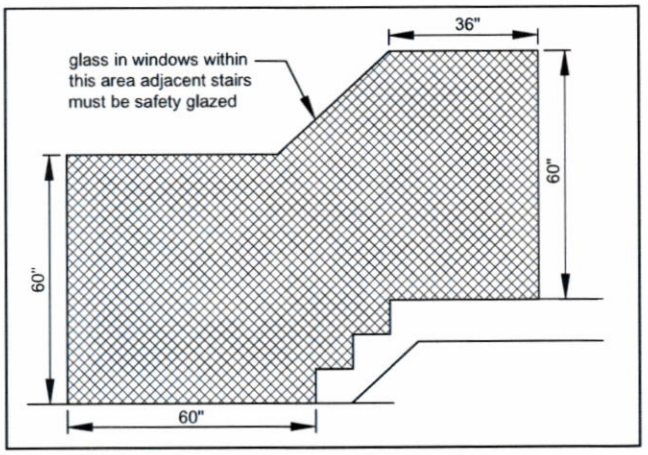

Figure A1. Safety glazing requirements.

Copyright © 2013 American Wood Council
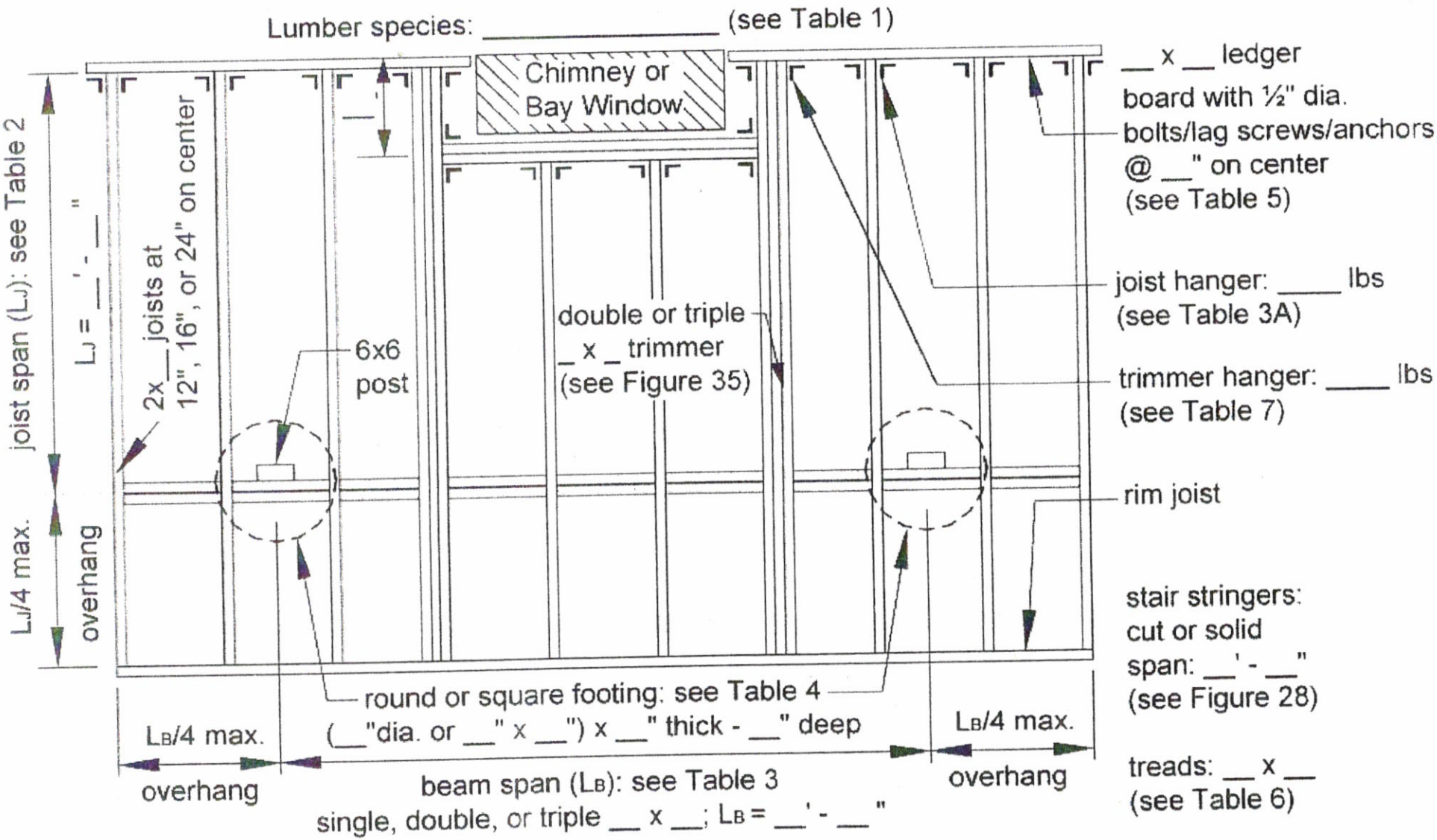
Figure 5. Typical Deck Framing Plan