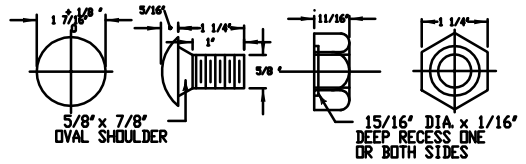

NOTE: AFTER GALVANIZING, THE NUT SHALL BE FREE RUNNING ON THE BOLT.

W-BEAM SPLICE BOLT AND NUT DETAIL

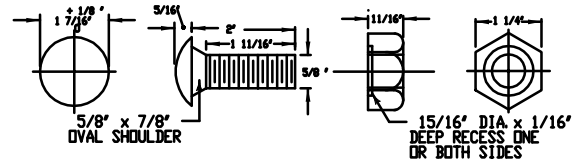

NOTE: AFTER GALVANIZING, THE NUT SHALL BE FREE RUNNING ON THE BOLT.

POST BOLT AND NUT DETAIL FOR R-B 350 SYSTEM 6 RUBRAIL

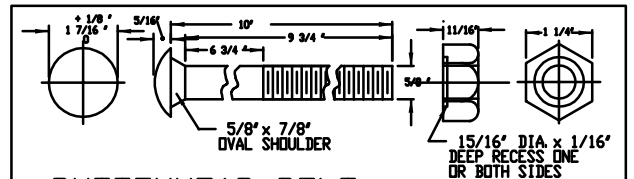

NOTE: AFTER GALVANIZING, THE NUT SHALL BE FREE RUNNING ON THE BOLT. UNTHREADED PORTION NOT TO EXCEED 6 1/2".

POST BOLT AND NUT DETAIL FOR R-B 350 & MD-B 350 GUIDERAIL

DELINEATOR NOTES:

1. DELINEATORS SHALL BE FORMED OF .080 POLY-CARBONATE OR .080 SHEET ALUMINUM IN CONFORMANCE WITH M.18.13.
2. REFLECTIVE SHEETING SHALL CONFORM TO M.18.09.02 REFLECTIVE BRIGHT WIDE ANGLE RETROREFLECTIVE SHEETING.
3. DELINEATORS SHALL BE INSTALLED ON THE POST CLOSEST TO THE DESIGNATED SPACING.
4. REFLECTIVE SHEETING SHALL BE WHITE EXCEPT ON THE LEFT SIDE OF DIVIDED STREETS, HIGHWAYS, RAMPS, AND ONE WAY ROADS IN THE DIRECTION OF TRAVEL WHEN IT SHALL BE YELLOW.
5. ONLY REFLECTORIZE RAIL THAT IS PARALLEL TO AND NOT GREATER THAN 6 FEET FROM THE EDGE OF THE ROADWAY. A MINIMUM OF THREE DELINEATORS MUST BE INSTALLED ON ANY RUN OF RAIL.

DELINEATOR SPACING:

RADIUS >/ 300 ft - SPACE EVERY 50 ft
RADIUS < 300 ft - SPACE EVERY 25 ft

REFLECTIVE SHEETING

DELINEATOR DETAIL

GENERAL NOTE:

1. NEW R-B 350 GUIDERAIL INCLUDING SYSTEMS ANCHORS AND TRANSITIONS INSTALLED ON LIMITED ACCESS HIGHWAYS AND RAMPS SHALL USE CLASS B TYPE II (10 GAUGE) W-BEAM RAIL ELEMENTS.

2. WHEN CORE 10 POSTS ARE SPECIFIED, 4 FEET SHALL BE GALVANIZED IN ACCORDANCE WITH ASTM A-123. THE GALVANIZED COATING SHALL REMAIN EXPOSED A MINIMUM OF 1" AFTER INSTALLATION.

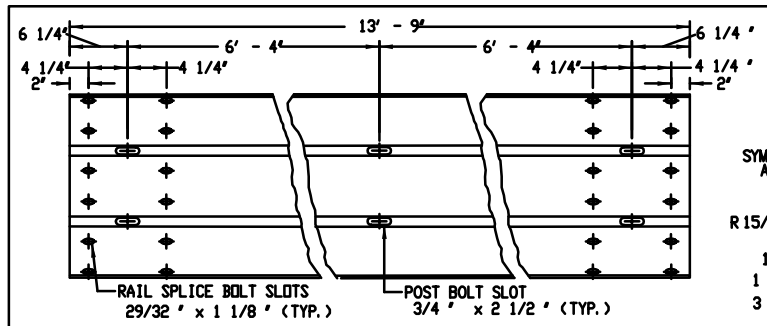

TYPICAL THRIE-BEAM RAIL ELEMENT
CLASS B, TYPE II

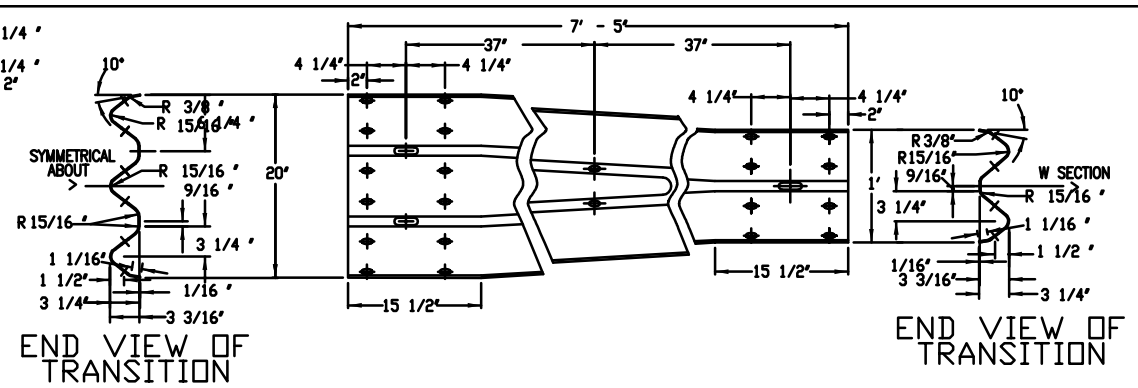

TYPICAL THRIE-BEAM TRANSITION ELEMENT
CLASS B, TYPE II

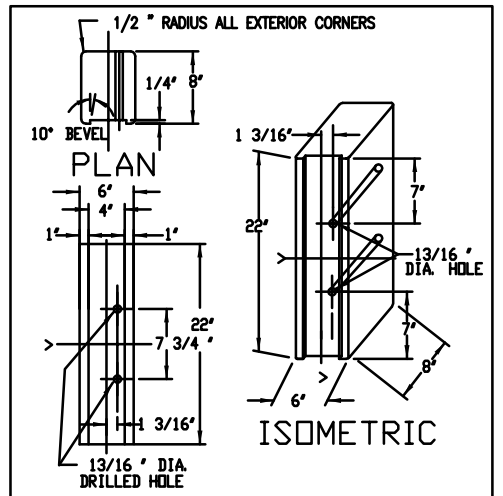

ELEVATION
THRIE-BEAM POLYETHYLENE
BLOCKOUT DETAIL

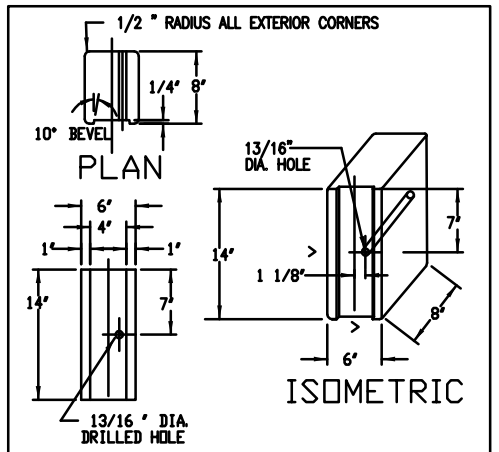

ELEVATION WITH BEAM
R - B 350
POLYETHYLENE
BLOCKOUT DETAIL

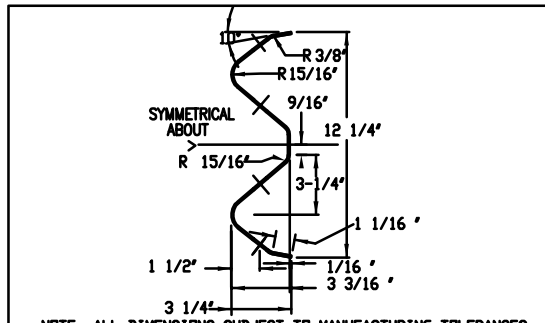

NOTE: ALL DIMENSIONS SUBJECT TO MANUFACTURING TOLERANCES

SECTION THRU
RAIL ELEMENT DETAIL

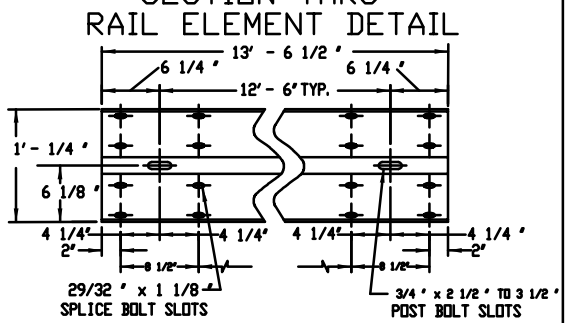

TYPICAL W-BEAM RAIL ELEMENT
CLASS A, TYPE II
(SEE NOTE 1 FOR 10 GAUGE APPLICATION.)

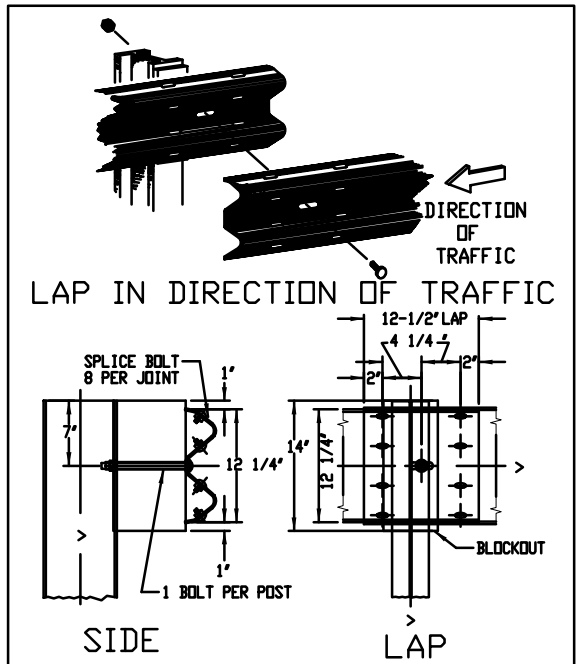

SYMMETRICAL ABOUT > FOR MEDIAN BARRIER INSTALLATION

LAP DETAIL

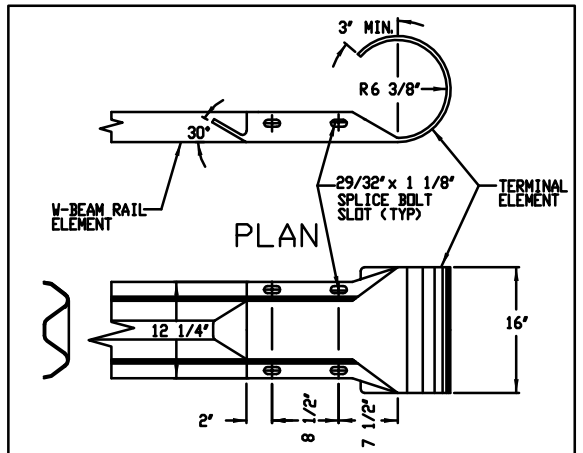

NOTE: THIS END SECTION IS NOT CRASH WORTHY. IT IS INTENDED FOR USE PRIMARILY ON LOW SPEED ROADWAYS, DRIVEWAY ENTRANCES, OR PARKING LOTS WHERE IT CAN NOT BE HIT.

R-B TERMINAL SECTION
CLASS A TYPE II

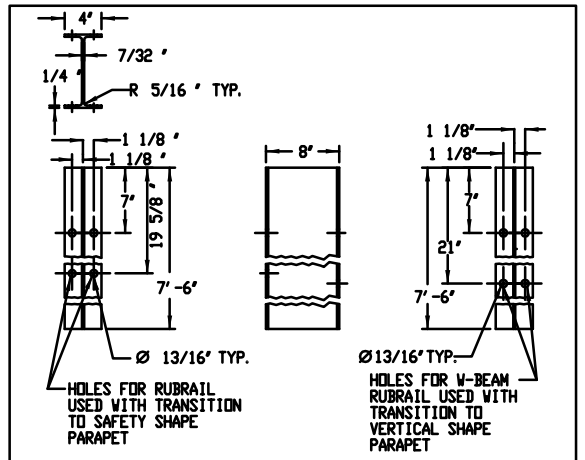

NOTE: THIS POST IS FOR USE WITH TRANSITIONS TO VERTICAL OR SAFETY SHAPE PARAPETS AT POST ONE AND TWO AND SYSTEM 6. INSTALL POST USING THE FRONT OR THE BACK DEPENDING ON NEED.

BOLT HOLE SPACING DETAIL
FOR W8 x13 UNIFORM POST
(SEE NOTE 2 FOR CORE 10 APPLICATION.)

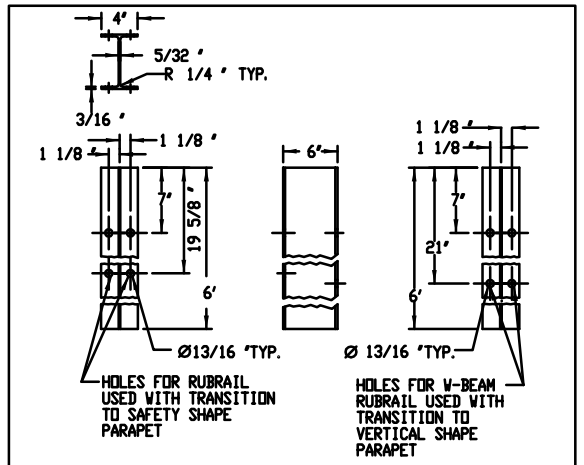

NOTE: W6 x 9 POSTS MAY BE USED IN PLACE OF W6 x 8.5 POSTS.

THIS POST IS FOR USE WITH STANDARD R-B 350 OR MD-B 350 AND POSTS 3 THRU 8 OR 9 IN TRANSITIONS TO SAFETY OR VERTICAL SHAPE PARAPETS. INSTALL POST USING THE FRONT OR THE BACK DEPENDING ON NEED.

BOLT HOLE SPACING DETAIL
FOR W6 x 8.5 UNIFORM POST
(SEE NOTE 2 FOR CORE 10 APPLICATION.)

Revised Date: 6 / 21 / 00

REV.	DATE	DESCRIPTION	SHEET. NO.
		REVISIONS	

DESIGNER:
DRAFTER:
CHECKED BY:
DATE CHECKED:

STATE OF CONNECTICUT
DEPARTMENT OF TRANSPORTATION

ENGINEER: TOWN OF KILLINGLY
APPROVED BY:
DATE:

OFFICE OF ENGINEERING

PROJECT TITLE: KILLINGLY STANDARD DRAWINGS

PLOTTED

TOWN: KILLINGLY

DRAWING TITLE: MISCELLANEOUS CONNECTICUT DETAIL METAL BEAM RAIL HARDWARE

PROJECT NO.:
DRAWING NO.:
SHEET NO.: 3 of 4